TECHNICAL DATA SHEET

Product Code: 653000

Product Description: iflo Henley Toilet Roll Holder

Product Specification

Material:
Zinc Alloy

Fittings:
Concealed wall fixings

Systems:
N/A

Additional Information

Contemporary Styling

Complete with concealed wall fixings

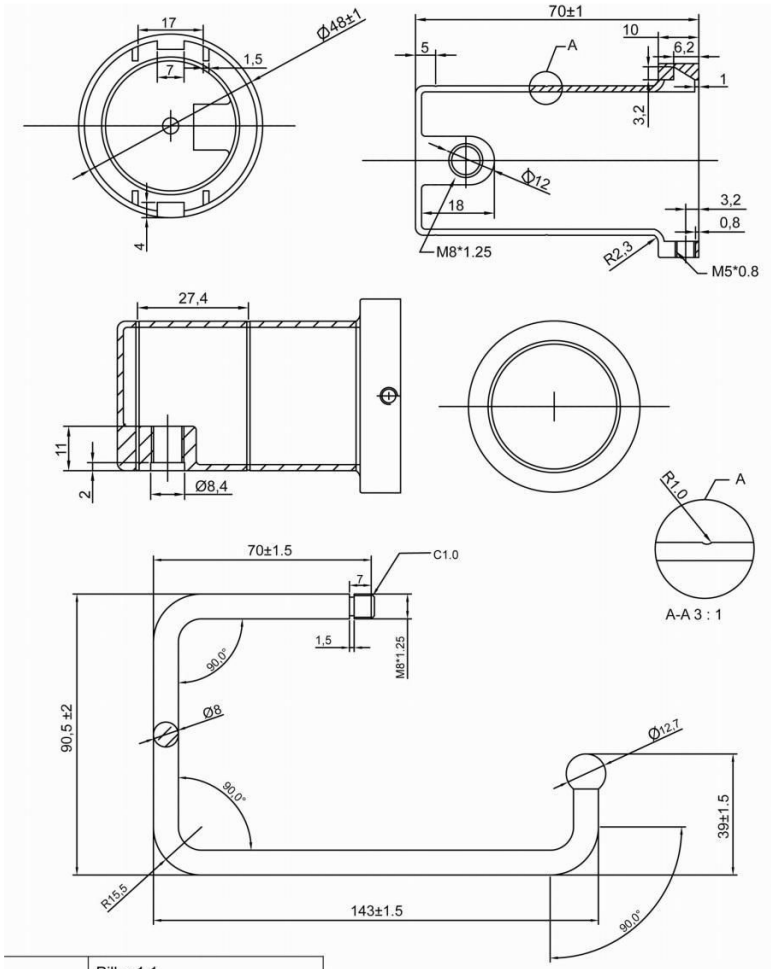

ntained within this specification sheet is believed to b
a guide only and do not necessarily represent the products available. Tra
notice. E&OE.' [04/2013]