TECHNICAL DATA SHEET

Product Code: 247291

Product Description: iflo Cereme 1510x510mm White/Chrome

Product Specification

Material:
Steel

Fittings:
Brackets

Systems:
N/A

Additional Information

Always inspect before installation

Do not clean with abrasive cleaning products

Supplied with brackets for ease of installation

Versatile traditional bathroom radiator and towel warmer in one

Chrome frame with 2 column white radiator in centre

Max operating pressure: 400 KPA (4 BAR)

723 watts / 2466 BTU

Weight: 21.2 KG

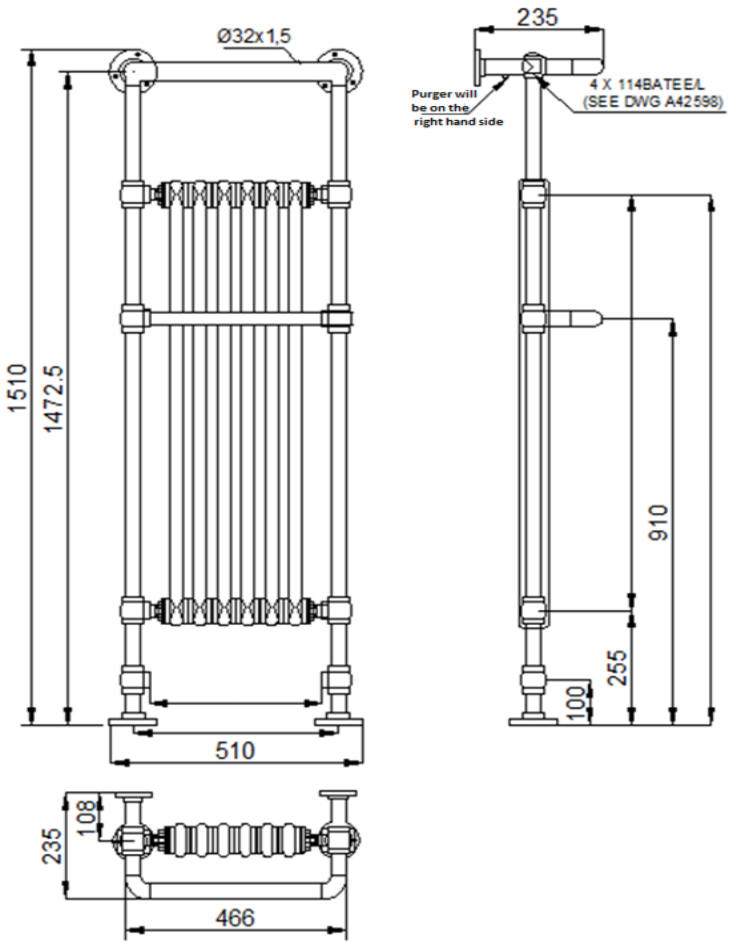

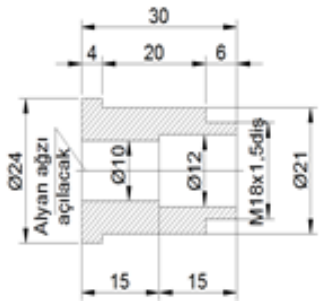

'The information contained within this specification sheet is believed to be correct and complete at the time of creation. All photographs / drawings are as a guide only and do not necessarily represent the products available. Travis Perkins PLC reserves the right to change product details and price without prior notice. E&OE.' [04/2013]