Step 3 - Fit fascias

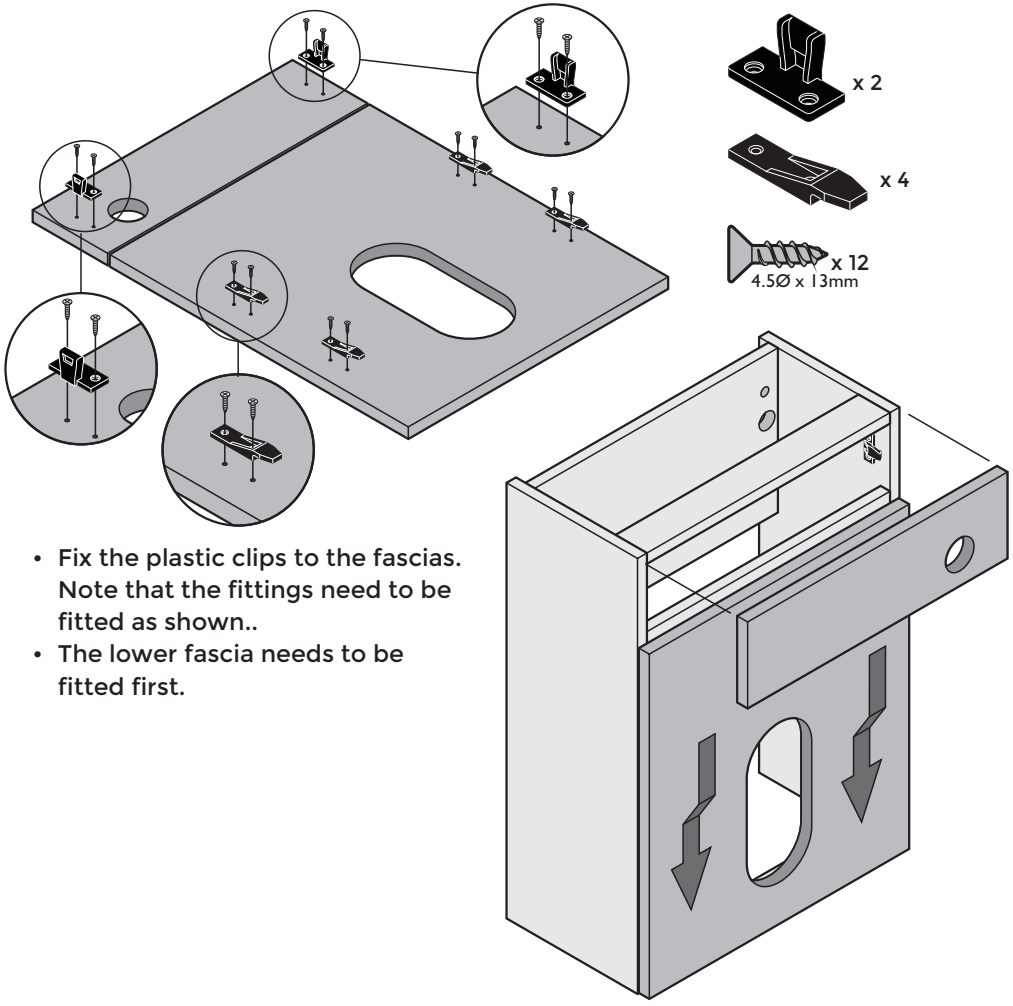

- Fix the plastic clips to the fascias. Note that the fittings need to be fitted as shown..
- The lower fascia needs to be fitted first.

Care and Maintenance

- This furniture is made of wood and has a water resistant finish. It should not be left wet.
- The quality of the finish is best maintained if it is wiped with a dry cloth after use.
- It should only be cleaned using a soft damp cloth followed by a dry cloth.
- Do not use bleach or any abrasive cleaner.

We have taken great care to ensure that this product reaches you in perfect condition. However should any parts be damaged or missing, please contact your point of purchase. This does not affect your statutory rights. In addition, your point of purchase will be happy to assist if you require replacement parts

WC Unit Installation Instructions

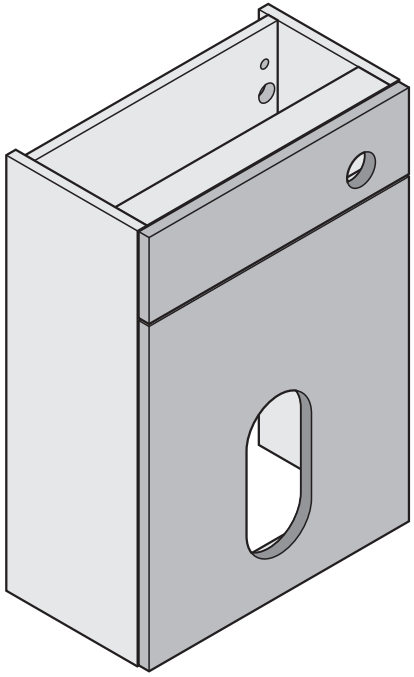

Important: Ensure all cutouts for plumbing are carried out prior to installation.

Install the unit first **before** fitting the fascias.
Check & remove plastic film from the fascias.

Please note: Images are for illustration purposes only.

Please read this leaflet carefully before attempting to fit the fascias to the unit.
This leaflet contains information which must be made available to the end user.

Please check the product for imperfections before fitting the doors.
Contact your point of purchase if an imperfection is found.

General Safety Instructions

- Handle product with care.
- When drilling walls, check first for hidden pipes and cables.
- Use safety eyewear when drilling.
- Keep all small parts away from children.
- If the product is over 25 kg (see packaging), 2 people are required to carry and install the unit.

Fixings and Fittings Supplied

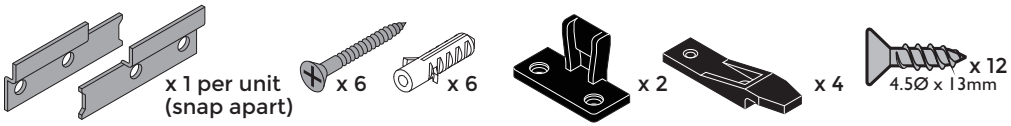

Tools Required (not supplied)

- Posidrive Screwdriver
- Power Drill, 2.5mm, 5mm Bits
- Level
- Pencil
- Tape measure
- Hammer

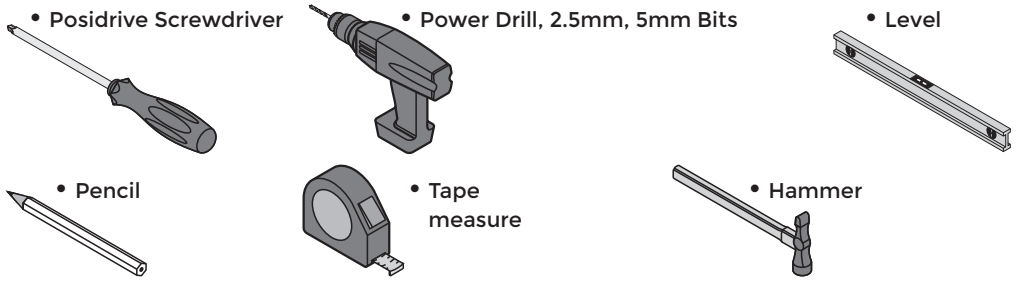

Step 1 - Wall Fixings

- Decide on the height of the vanity unit and use a spirit level to draw a horizontal guideline.
- Mark out the internal dimensions of the unit making sure the plates are within the internal dimensions of the unit by 2-3 mm.
- Using a cordless drill along with the wall plugs and screws provided, fix the plates in place.
- If the wall is not solid, you will need to use your own fixings. Ensure that they are adequate to support the total weight of the unit as stated on the packaging.

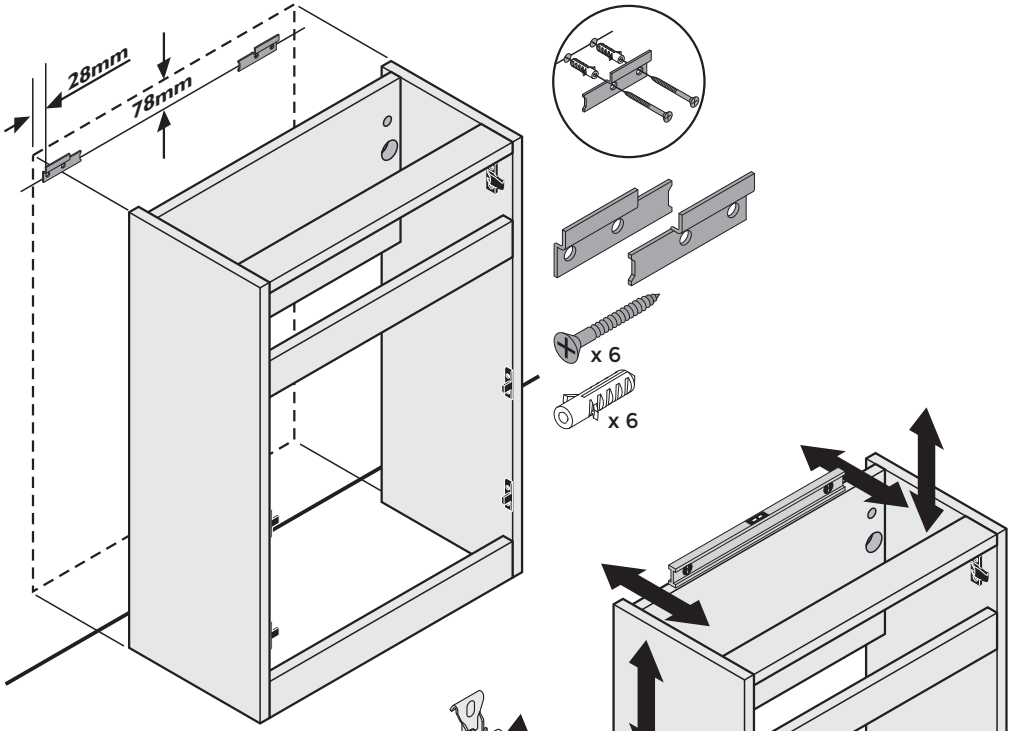

Step 2 - Hang Unit

- Hang the unit on the wall mounting plates.
- Use a spirit level to level the unit by adjusting the lower screw on the hanging bracket.
- Once level, adjust the upper screw on the hanging bracket to tighten the unit to the wall.

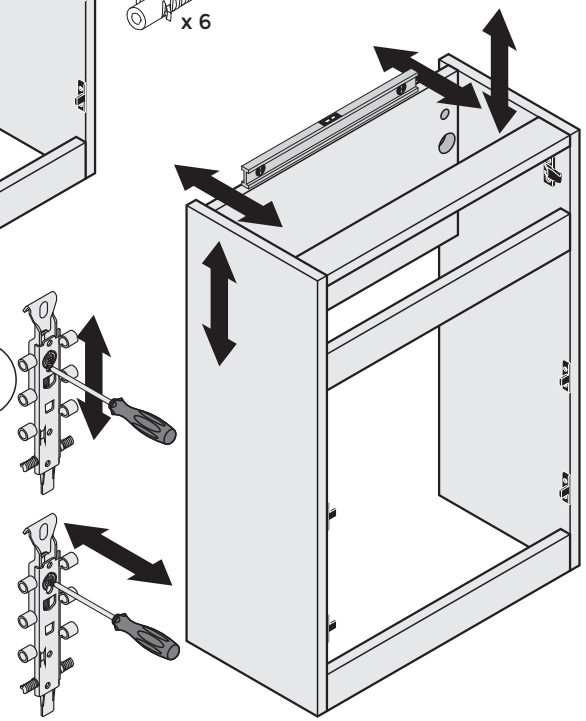

Macdee by WIRQUIN

PNEU COMPACT II DUAL FLUSH FRONT AND TOP ACCESS PNEUMATIC CONCEALED WC CISTERN

CONCEALED CISTERN FITTING INSTRUCTIONS

Please ensure these instructions are followed carefully – if you are unsure about any aspect of the installation, please consult a Qualified Installer. In the event of any problem with the function of this equipment, please check installation before contacting your supplier.

Before commencing installation, please check that all of the following items have been supplied, and you are thouroughly familiar with these instructions.

PNEU-COMPACT CISTERN WITH 2" OUTLET

Contents of Carton	Contents of Pack 1	Contents of Pack 2
Cistern Lid Cistern Body Flushpipe Inlet Valve (Fitted) Outlet Valve (Fitted) Complete with 1.5 mtr hose Wall Hanging Bracket Pack 1 of pre-packed items Pack 2 of pre-packed items	Screw (x4) Wall Plug (x4) Lid Fixing Screw (x2) Finned Flushpipe Connector	2" Flushpipe Coupling Nut Slip Ring Flushpipe Sealing Washer

PNEU-COMPACT CISTERN WITH 1.5" OUTLET

Contents of Carton	Contents of Pack 1
Cistern Lid Cistern Body Flushpipe Inlet Valve (Fitted) Outlet Valve (Fitted) Complete with 1.5 mtr hose Wall Hanging Bracket Pack 1 of pre-packed items	Screw (x4) Wall Plug (x4) Lid Fixing Screw (x2) Finned Flushpipe Connector Flushpipe Sealing Washer Flushpipe Coupling Nut

All parts are quantity 1 unless stated otherwise

INSTALLATION OF EQUIPMENT

WARNING:

Do not use mole grips on plastic nuts.

Do not use sealing compound as damage may occur to plastic components.

Do not overtighten plastic nuts.

If the cistern is being used as front access do not use the lid fixing screws.

The fixings supplied with this cistern will NOT suit every type of material or construction

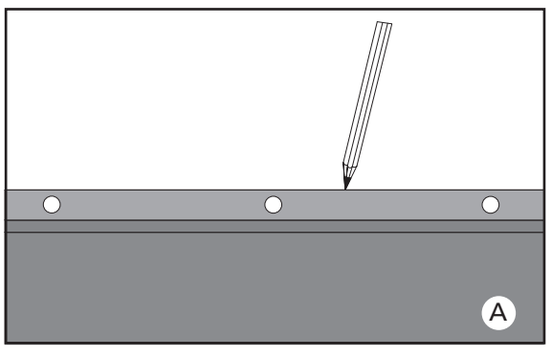

Line markings of cistern as drawn in picture 'A'

CISTERN BODY

Note: Maximum dimensions of flushpipe establish where cistern is to be located relative to the WC pan. Hold cistern in place, ensure cistern is level using a spirit level, and mark where the cistern is to be located, as shown in picture A. Mark top and sides of cistern and fit wall hung fixing bracket to the dimensions shown below.

PLEASE NOTE – If the furniture unit is front access only allow a 50mm gap from the underside of the unit top to the top of the cistern to allow easy access for the flushing valve.

Using a screwdriver, lock the wall hung fixing bracket into position using screws provided, as shown in picture 'B'

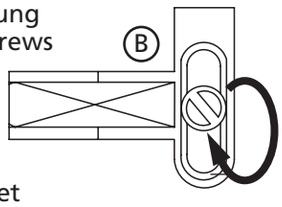

When fitting wall hung fixing bracket, ensure that the arrow indicated points towards wall/cabinet

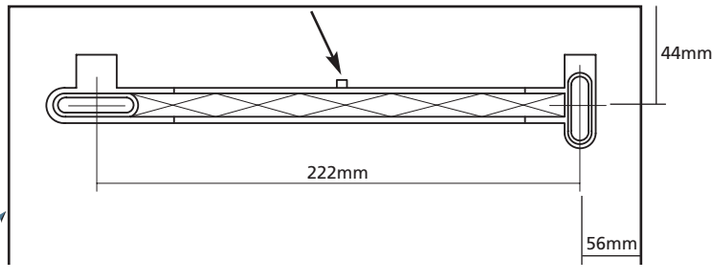

FLUSH VALVE SETTINGS

6 and 3 Litres

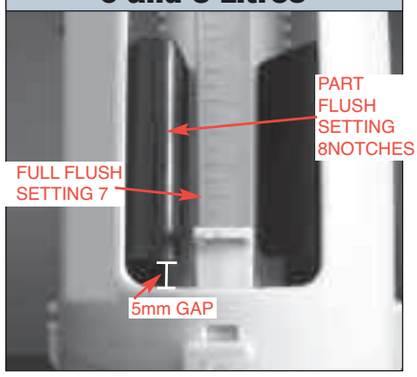

The valve is pre-set to flush 6 and 3 litres.

5 and 3 Litres

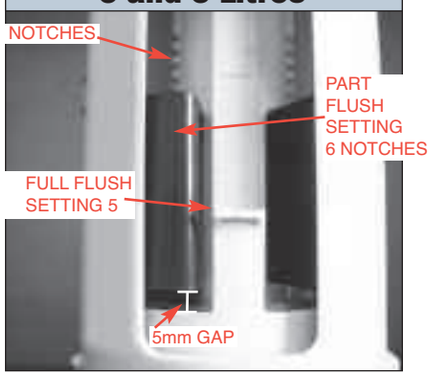

To change to 5 and 3 litre flush move the full flush adjustment slide to 5 and the part flush float to 6 notches.

4 and 2.6 Litres

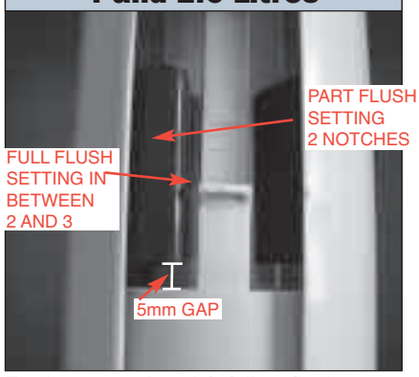

To change to 4 and 2.6 litre flush move the full flush adjustment slide to 2-3 and the part flush float to 2 notches.

Make sure the grey float is always 1 notch (5mm) above the full flush adjustment slide or the valve will stick open.

Final Commissioning of Flushing Valve

1. Check the backnut/base seal are water tight.
2. Check the hose is connected to the flushing valve correctly.
3. To clean seal unclip valve and remove seal as shown below.

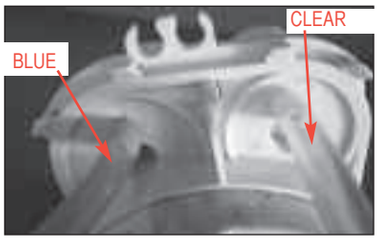

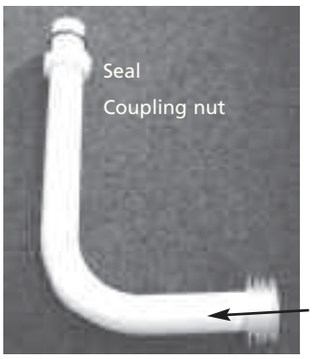

1.5” Flushpipe

Place the coupling nut, followed by the seal, on the flushpipe, secure coupling nut hand tight, tighten further if necessary, fit finned flushpipe connector on to flushpipe, insert into W.C. pan.

Finned flushpipe connector

2” Flushpipe

Place the coupling nut, followed by slip ring, then the seal on the flushpipe, ensure the seal has the bevelled edge pointing towards the end of the flushpipe, insert the flushpipe up to the stops in the valve base then secure coupling nut hand tight, tighten further if necessary, fit finned flushpipe connector onto 1.5” end of flushpipe, insert into W.C. pan.

Finned flushpipe connector

Final Commissioning

Ensure that all pipework is clear of debris before connecting to the inlet valve.

Once installation is complete, turn on water supply and allow the cistern to fill. Adjust the water level by rotating the threaded rod, the water level needs to be set to the 6 litre water line marked on the cistern.

Hold the inlet valve float down, causing the cistern to internally overflow, ensure overflow is capable of discharging the incoming water, if necessary reduce flow by partially closing the isolation valve (not supplied).

WIRQUIN

Wirquin Ltd.
Warmsworth Halt Industrial Estate, Warmsworth, Doncaster, UK, DN4 9LS
Technical/Aftersales Tel: 00 44 (0) 1302 312202 • Fax: 00 44 (0) 1302 312251
Sales Enquiries Tel: 00 44 (0) 8444 122029
Email: sanitary.technical@wirquin.co.uk www.wirquin.co.uk

Code:	PM00PCII
Issue No.	01
Date:	21/09/09

KAYLA Flushing Valve

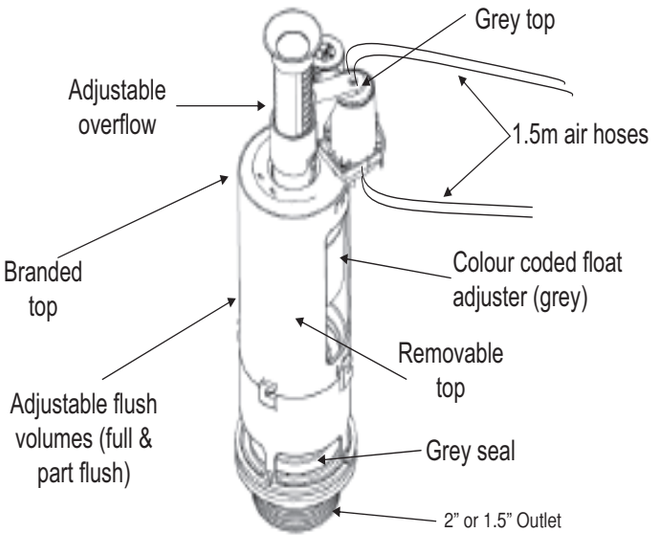

1.5" and 2" Outlet Valve

Insert threaded section of the valve into cistern, with base seal on the inside, secure with back-nut hand tight, tighten further 1/2 turn using a spanner, check for leaks, tighten further if necessary.

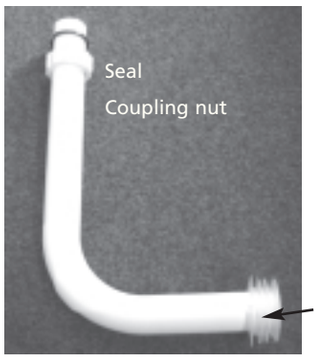

1.5" Flushpipe

Place the coupling nut, followed by the seal, on the flushpipe, secure coupling nut hand tight, tighten further if necessary, fit finned flushpipe connector on to flushpipe, insert into W.C. pan.

Finned flushpipe connector

2" Flushpipe

Place the coupling nut, followed by slip ring, then the seal on the flushpipe, ensure the seal has the bevelled edge pointing towards the end of the flushpipe, insert the flushpipe up to the stops in the valve base then secure coupling nut hand tight, tighten further if necessary, fit finned flushpipe connector onto 1.5" end of flushpipe, insert into W.C. pan.

Finned flushpipe connector

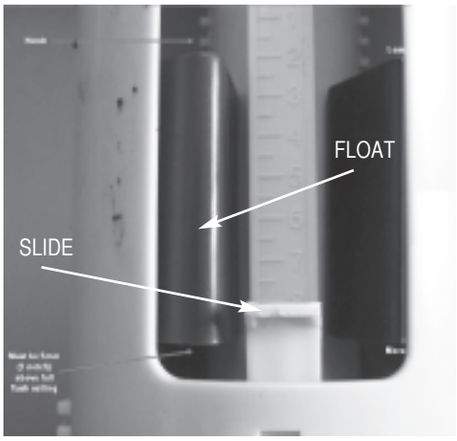

To adjust the full flush, move the slide down for more and up for less. Part flush move the float up for less and down for more.
Always keep the part flush float 1 notch above the full flush setting.

DO NOT GO BELOW SETTING 8

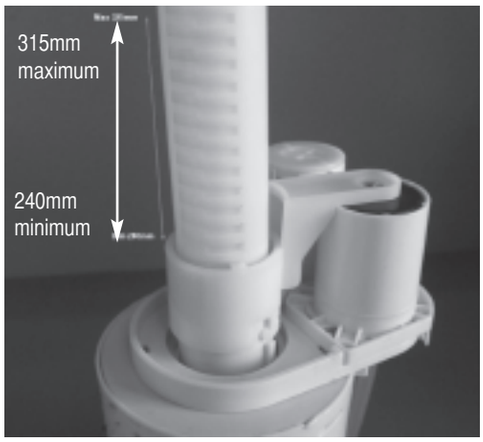

The overflow is adjustable from 240mm to 315mm in height. Clip and lock the overflow 20mm above the waterline in the cistern. Ensure the overflow is capable of discharging the incoming water.

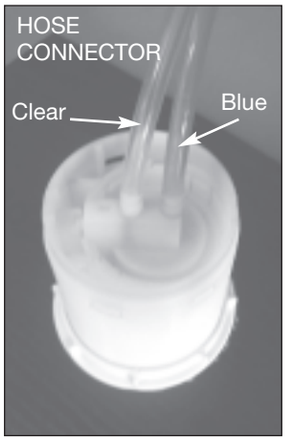

Connect the hoses to the button, blue hose to the end of the barrel nozzle, clear to the centre nozzle.
Make sure the hose connection is firmly on the nozzle and in the correct order or the part flush will not work.

Wirquin Ltd.
Warmsworth Halt Industrial Estate, Warmsworth, Doncaster, UK, DN4 9LS
Technical/Aftersales Tel: 00 44 (0) 1302 312202 • Fax: 00 44 (0) 1302 312251
Sales Enquiries Tel: 00 44 (0) 8444 122029
Email: sanitary.technical@wirquin.co.uk www.wirquin.co.uk

Code:	PM000PPB	
Issue No.		02
Date:	02/08/10	

KARA Push Buttons and CASPIA Push Plates

KARA 50mm & KARA 72mm DUAL FLUSH BUTTONS

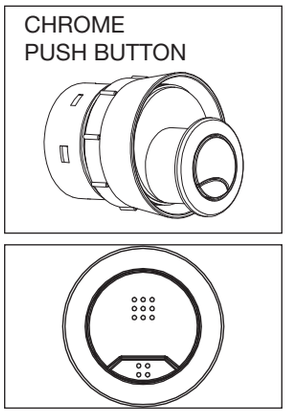

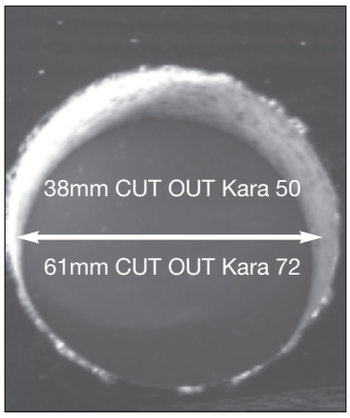

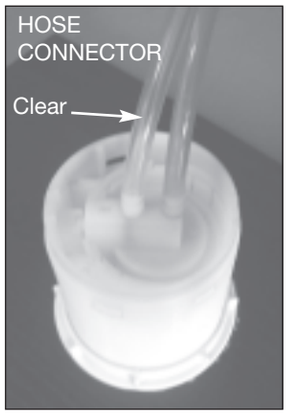

DUAL FLUSH BUTTON ASSEMBLY KARA 50mm & KARA 72mm Buttons

1. Cut out 38mm hole for Kara 50 and 61mm hole for Kara 72.
2. Put the threaded tail of the button through the hole and hand tighten the backnut.
3. Connect the hoses to the button, blue hose to the end of the barrel nozzle, clear to the centre nozzle.

CASPIA DUAL FLUSH PUSHPLATES

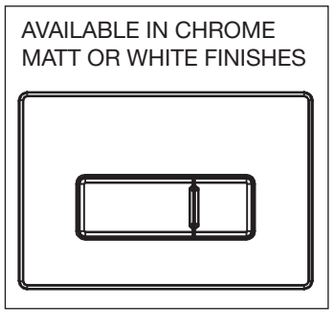

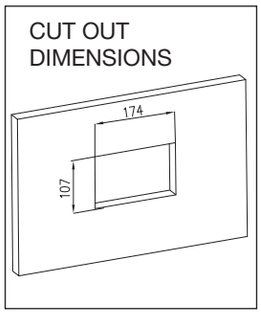

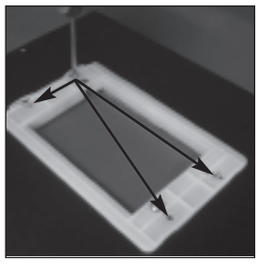

Fix using 4 screws as indicated

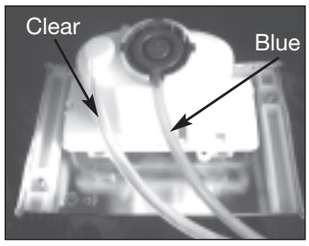

Connect the hoses as follows : Blue to Centre Blue Cap and Clear to white cap as shown

Clip on the push plate as above, to remove the push plate push the buttons in and pull left to unclip

KARA 50mm & KARA 72mm SINGLE FLUSH BUTTONS

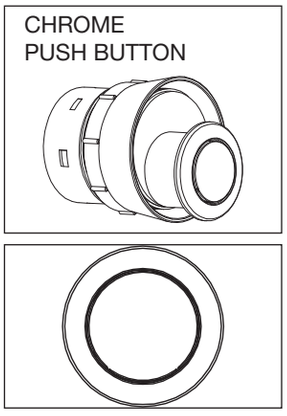

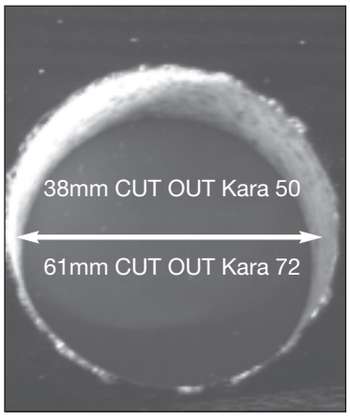

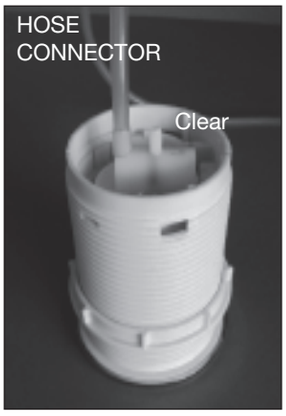

SINGLE FLUSH BUTTON ASSEMBLY KARA 50mm & KARA 72mm Buttons

1. Cut out 38mm hole for Kara 50 and 61mm hole for Kara 72.
2. Put the threaded tail of the button through the hole and hand tighten the backnut.
3. Connect the hoses to the button, clear to the end of the barrel nozzle.

Cistern Range CPL

TROUBLE SHOOTING GUIDE FOR THE INLET VALVE / PNEUMATIC FLUSHING VALVE / PUSH BUTTON / PUSHPLATE

THE INLET VALVE WILL NOT LET WATER INTO THE CISTERN

- Check the water supply and isolation valve are turned on.
- Make sure the inlet valve float has free movement and is not in shut off position.
- Check the inlet valve for debris, remove diaphragm and clean with warm soapy water.
- **Is the water supply mains or tank fed?** Inlet valve working pressure is 0.1 bar (1 metre of head) to 14 bar.

THE INLET VALVE WILL NOT SHUT OFF

- Check the inlet valve for debris.
- Make sure the inlet valve float has free movement and is not jammed.
- **Is the water supply mains or tank fed?** Inlet valve working pressure is 0.1 bar (1 metre of head) to 14 bar.

THE FLUSHING VALVE KEEPS RUNNING/FLUSHING

- Unclip the flushing valve from the base remove the seal and check for debris, clean with warm soapy water and put the seal back on the flushing valve then clip the flushing valve back into place.
- Make sure the flushing valve is set to the correct setting as stated in the instruction leaflet. **The grey float must always be 1 notch (5mm) above the white slide and the white slide never set below 8 or the valve will stick open.**
- Check the flushpipe has not been set too far into the base of the valve.

THE PUSH BUTTON / PUSHPLATE WILL ONLY WORK ON FULL FLUSH OR NOT FLUSH

- Check the hoses have been put on in the correct order as per the instruction leaflet.
- Make sure the hoses are correctly connected to the button and flushing valve nozzles as per the instruction leaflet.

Macdee
wirquin

Cistern Range CDC

Code:	PM000TG
Issue No.	02
Date:	12/08/14

TROUBLE SHOOTING GUIDE FOR THE INLET VALVE / CABLE OPERATED FLUSHING VALVE / BUTTON

THE INLET VALVE WILL NOT LET WATER INTO THE CISTERN OR IS TAKING A LONG TIME TO FILL

- Check the water supply and isolation valve are turned on.
- Make sure the inlet valve float has free movement and is not in shut off position.
- Check the inlet valve for debris, remove diaphragm and clean with warm soapy water.
- **Is the water supply mains or tank fed?** Inlet valve working pressure is 0.1 bar (1 metre of head) to 14 bar.

THE INLET VALVE WILL NOT SHUT OFF

- Check the inlet valve for debris.
- Make sure the inlet valve float has free movement and is not jammed.
- **Is the water supply mains or tank fed?** Inlet valve working pressure is 0.1 bar (1 metre of head) to 14 bar.

THE FLUSHING VALVE KEEPS RUNNING/FLUSHING

- Unclip the flushing valve from the base remove the seal and check for debris, clean with warm soapy water and put the seal back on the flushing valve then clip the flushing valve back into place.
- Make sure the flushing valve is set to the correct setting as stated in the instruction leaflet.
- Check the flushpipe has not been set too far into the base of the valve.
- **Make sure the cable is not kinked or stretched as this will make the flushing valve stick open.**

THE PUSH BUTTON KEEPS STICKING / NO FLUSH

- Make sure the cut out for the button is 40mm.
- Make sure the button is correctly connected to the button housing.

WIRQUIN Ltd. - Warmsworth Halt Industrial Estate - Warmsworth
Doncaster DN4 9LS - UNITED KINGDOM
sales@wirquin.co.uk 0044 8744 412 202 www.wirquin.co.uk

Macdee wirquin