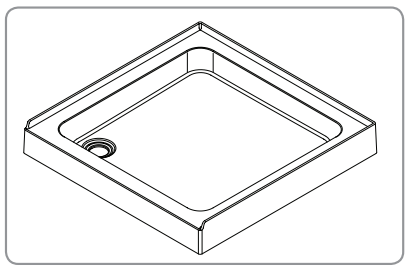
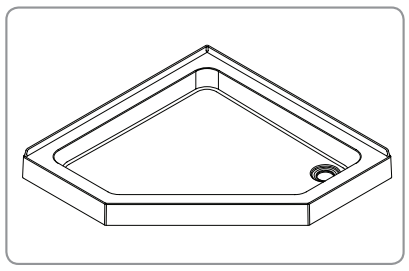
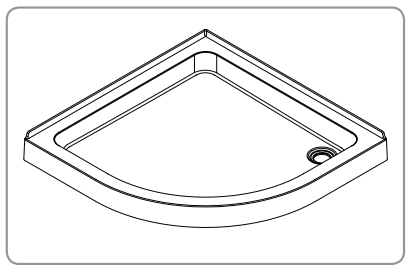
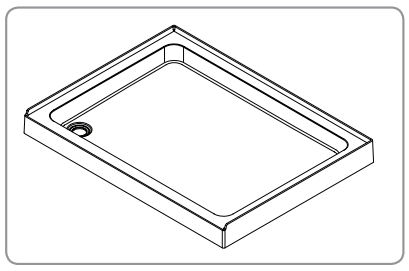

MIRA FLIGHT SHOWER TRAY

Installation and User Guide

GUARANTEE

Mira Showers guarantee the Mira Flight Shower Tray against any defect in materials or workmanship for a period of **ten** years from the date of purchase. For terms and conditions refer to the back cover of this guide.

Recommended Usage	
Domestic	✓
Light Commercial	✓
Heavy Commercial	✗
Healthcare	✓

Notification to designers, installers and users:

The majority of all shower trays will show an increase in the potential for slipping, when the surface is wet. This is particularly the case when soap, shampoo, bath oil etc. are used. The Construction Products Directive (89/106/EEC)".

IMPORTANT INFORMATION

Important! The shower trays featured in this manual are available for use as riser and non-riser products and are supplied with a waste.

Carefully unpack and check the tray for colour, size, general acceptability and compatibility with the shower enclosure and other bathroom furniture.

Check for transit damage and report any faults immediately to your supplier. No claims for the above will be considered after installation.

Carefully remove all of the blue protective film from the tray for inspection.

Caution! Additional protective coverings such as a dust sheet should then be used to protect the tray from damage from falling objects.

Note! Shower must not produce more than 25 litres per minute.

Once the waste pipe has been connected pour water into the tray to check the tray and pipe connection for correct drainage prior to final fix and tiling.

We recommend this tray is fitted as part of a fully enclosed cubical. If this tray is fitted as a walk-in installation, it is expected that an amount of water will spill onto the open area of the floor. We would therefore advise fixing a threshold strip to minimize this.

Fitting this product is acceptance of quality.

Warning! The Mira Flight 760 and 800 variants weigh less than 25 kg and are a **'one-person-lift'**. All other Mira Flight tray variants weigh in excess of 25 kg and will require a **'two-person-lift'**.

INSTALLATION

1 **Non Upstand Trays**

Note! Where the shower tray comes into contact with the wall, apply a liberal amount of silicone sealant before installation. This will help secure the shower tray in position and reduce any rubbing of the surfaces.

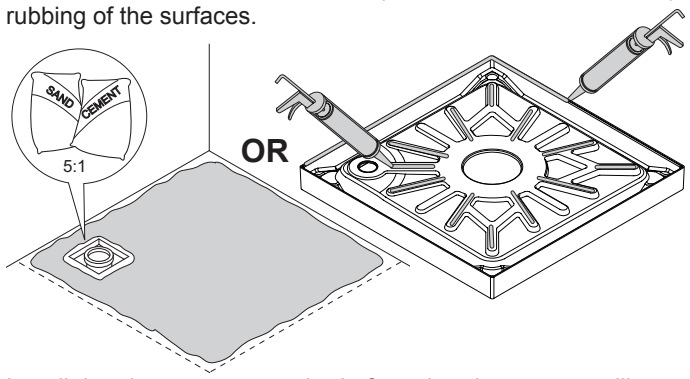

Install the shower tray on a bed of sand and cement or silicone sealant.

2

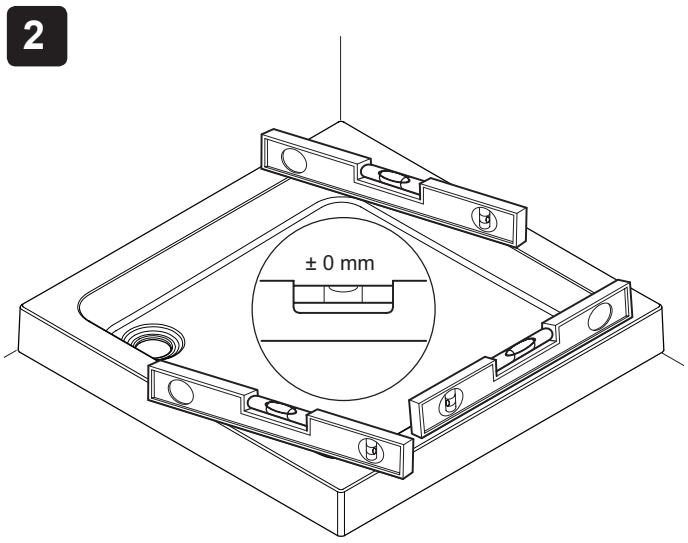

Place the shower tray on a flat surface and using a spirit level check that it is straight and flat and that the shower cubicle will sit on its surface correctly when fitted.

3

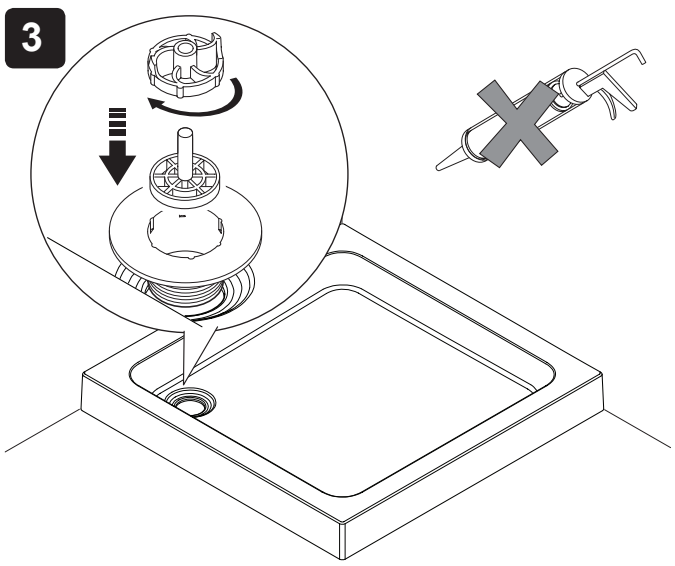

Fit the waste, as per the instructions supplied with the waste.
Note! Do Not Use silicone sealant

4

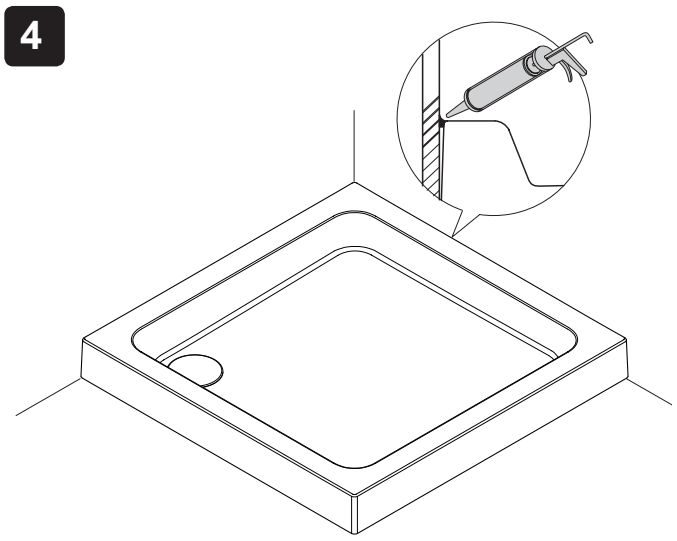

Apply silicone sealant in accordance with the manufacturer's instructions to seal the shower tray to the wall.

5

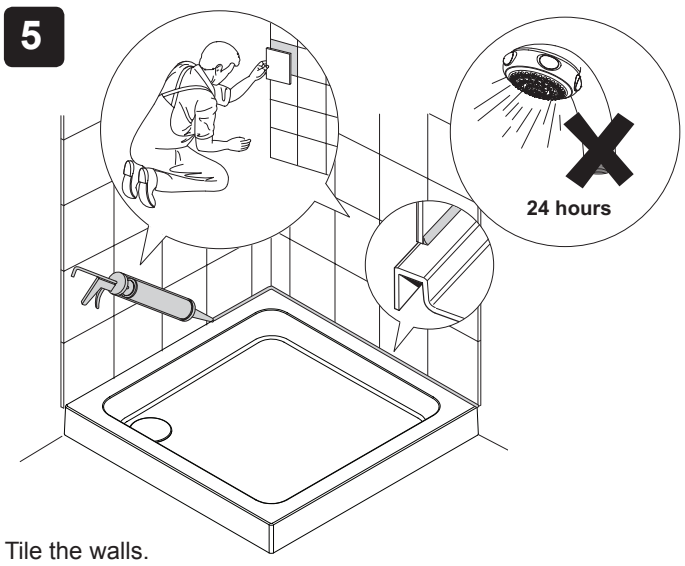

Tile the walls.
Apply silicone sealant in accordance with the manufacturer's instructions to seal the shower tray to the tiled wall surface.

INSTALLATION

1 **Upstand Trays**

Note! Where the shower tray comes into contact with the wall or plaster board surface, apply a liberal amount of silicone sealant before installation. This will help secure the shower tray in position and reduce any rubbing of the surfaces.

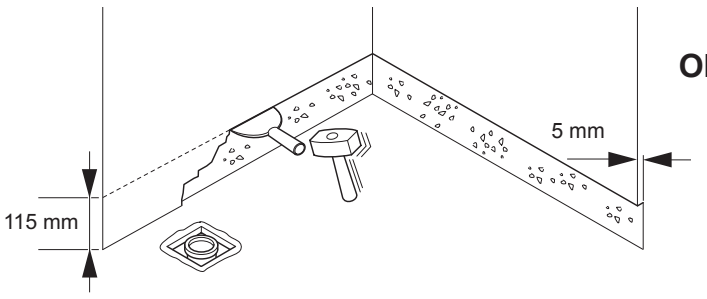

Solid wall preparation.

OR

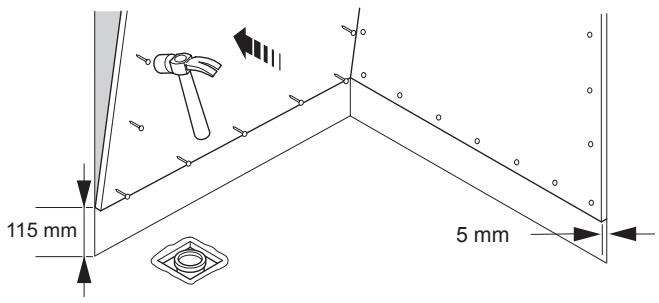

Stud partition wall preparation.

3

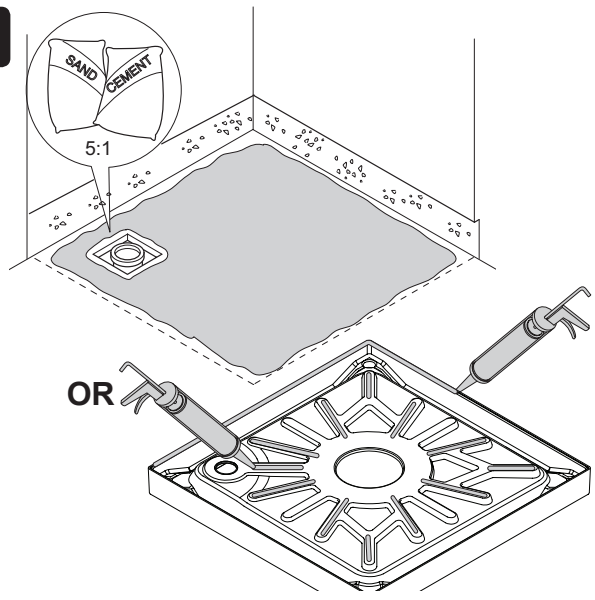

Install the shower tray on a bed of sand and cement or silicone sealant.

4

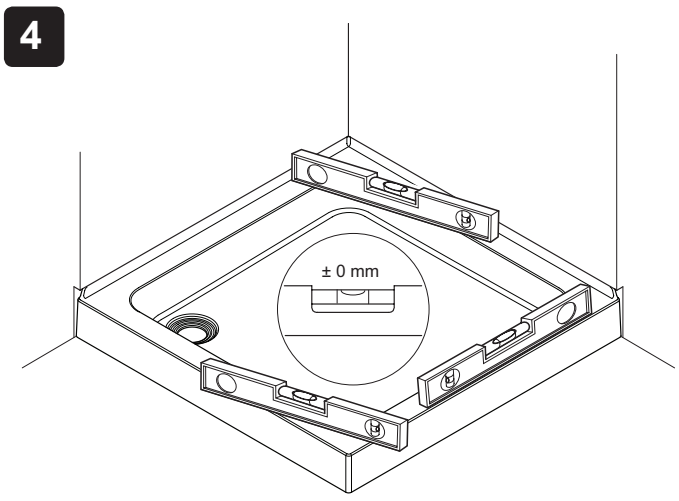

Place the shower tray on a flat surface and using a spirit level check that it is straight and flat and that the shower cubicle will sit on its surface correctly when fitted.

5

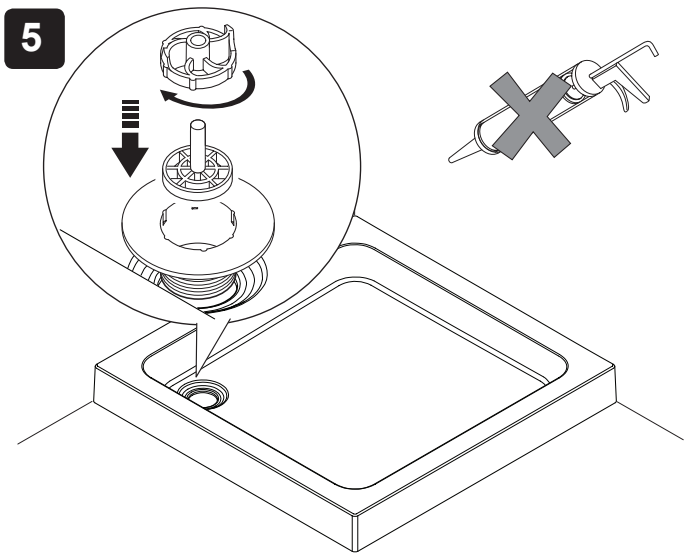

Fit the waste, as per the instructions supplied with the waste.
Note! Do Not Use silicone sealant

6

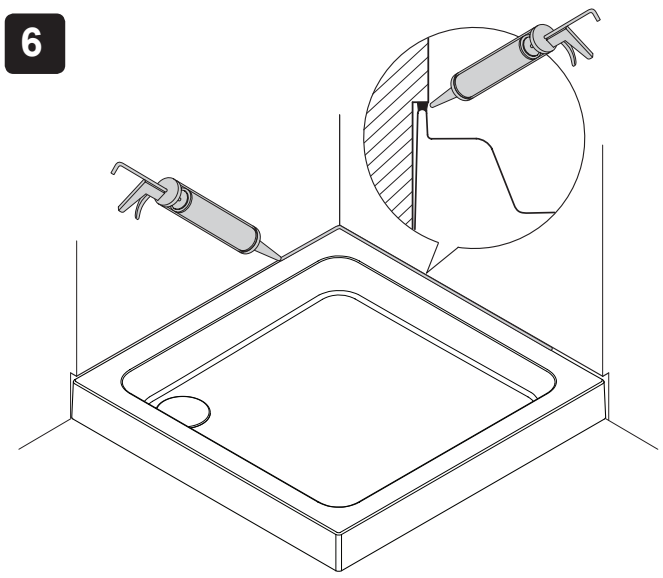

Apply silicone sealant in accordance with the manufacturer's instructions to seal the shower tray to the wall.

7

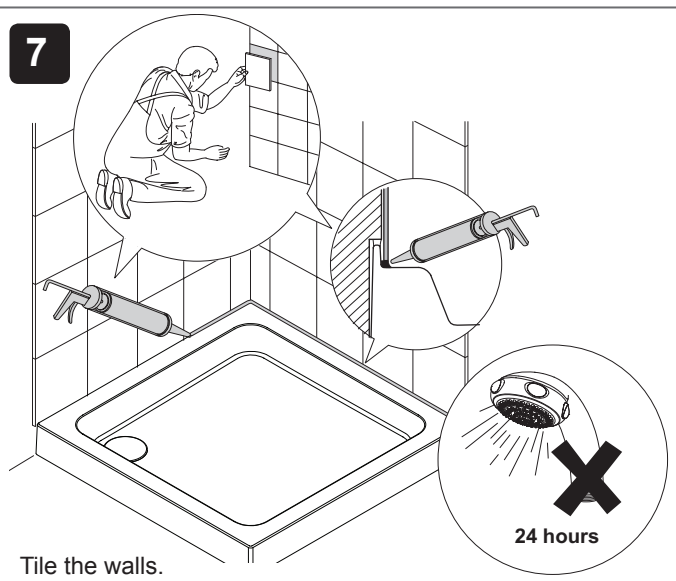

Tile the walls.

Apply silicone sealant in accordance with the manufacturer's instructions to seal the shower tray to the tiled wall surface.

8 If you want to install your shower tray using a riser conversion kit, please refer to the Installation and User Guide packed with the riser kit.

CARE AND MAINTENANCE

Due to the physical nature of water, small pockets of water may remain on the shower tray after showering. We recommend that both the tray and the enclosure are wiped down with a dry cloth after use.

Hot soapy water should be used and then the tray should be wiped. Cleaners of gritty or abrasive nature should **never** be used.

The acrylic ABS surface of this shower tray has good resistance properties to acids but should not come into contact with alkalis or organic solvents, such as caustic soda, dry cleaning agents and paint strippers.

Regularly clean the waste to ensure correct operation.

DIMENSIONS

Square or Rectangular Shower Tray

All Dimensions in mm

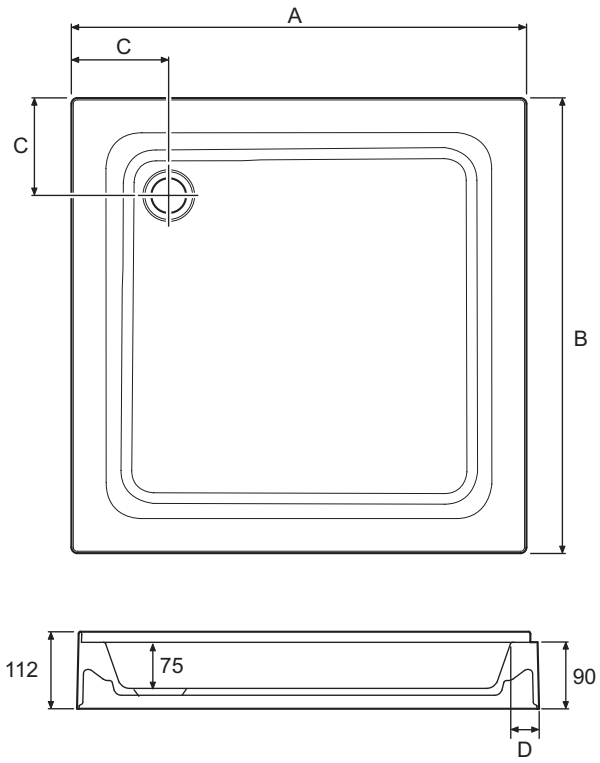

Flat Top					Upstand			
A	B	C	D	Legs	A	B	C	D
760	760	160	55	5	770	770	165	60
800	800	160	55	5	810	810	165	60
900	900	160	55	5	910	910	165	60
900	760	160	55	5	910	770	165	60
1000	760	160	55	7	1010	770	165	60
1000	800	160	55	7	1010	810	165	60
1200	760	160	55	7	1210	770	165	60
1200	800	160	55	7	1210	810	165	60
1200	900	160	55	7	1210	910	165	60
1400	800	160	55	7	1510	770	165	60

Pentagon Shower Tray

All Dimensions in mm

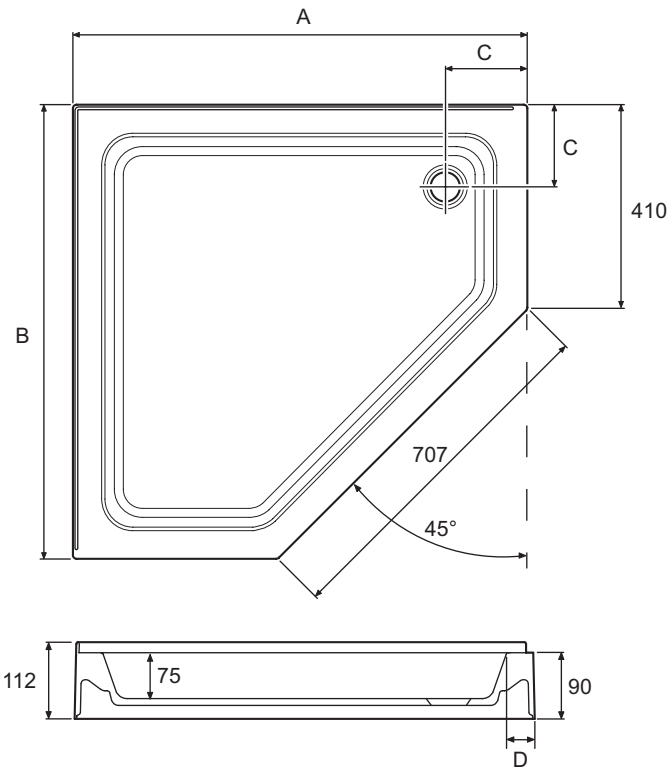

Flat Top					Upstand			
A	B	C	D	Legs	A	B	C	D
900	900	160	55	8	910	910	165	60
1200	900	165	55	9				

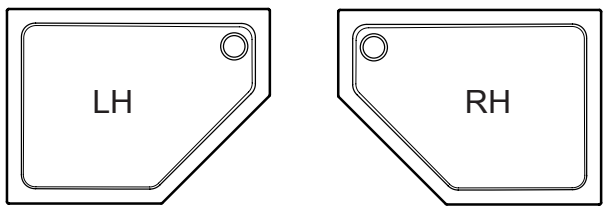

Quadrant Shower Tray

All Dimensions in mm

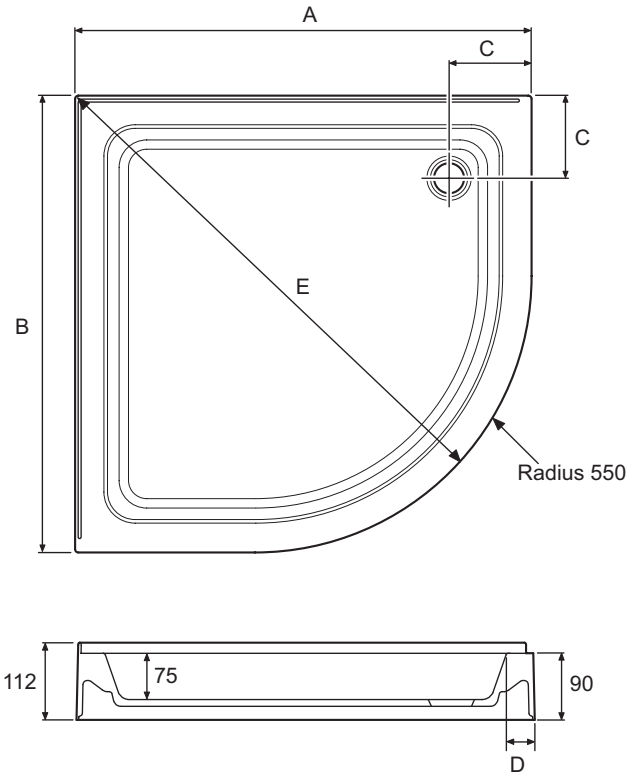

Flat Top					Upstand				
A	B	C	D	Legs	A	B	C	D	E
800	800	160	55	5	810	810	165	60	918
900	900	160	55	5	910	910	165	60	1047
1000	800	160	55	7					1054
1200	900	165	55	7					1275

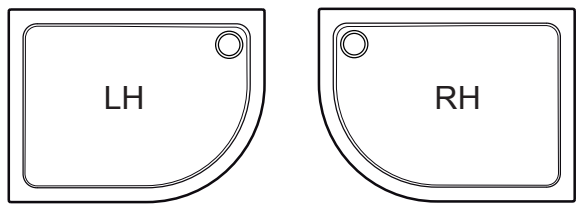

SPARE PARTS

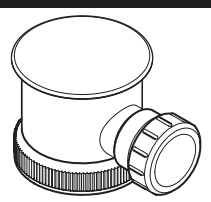

1783.230 Waste

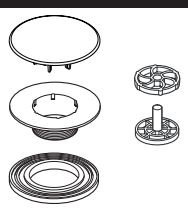

1783.231 Cover, Flange, Rubber Seal, Tool and Hair Trap

CE

Kohler Mira Limited, Cromwell Road, Cheltenham, Gloucestershire, GL52 5EP, UK

12

EN 14527 - CL1 + CL2

CUSTOMER SERVICE

Guarantee

Your product has the benefit of our manufacture's 10 year guarantee (5 years for any commercial installations) which starts from date of purchase. This guarantee only applies in the United Kingdom and Republic of Ireland. Note wastes, upstand kits and riser kits are guaranteed for 1 year only. To activate this guarantee, please return your completed registration card, visit our website or free phone 0800 0731248 within 30 days of purchase (UK only).

Within the guarantee period we will resolve defects in materials or workmanship by either repairing the product, providing new goods and parts to you in replacement or refunding (up to but not in excess of) the original purchase price, as we may choose.

This guarantee is in addition to your statutory rights and is subject to the following conditions:

- The guarantee applies solely to the original installation under normal use and to the original purchaser only. The product must be installed and maintained in accordance with the instructions given in this user guide. The product must be inspected and issues reported before installation.
- Servicing must only be undertaken by us or our appointed representative. **Note!** if a service visit is required the product must be fully installed and connected to services.
- Repair under this guarantee does not extend the original expiry date. The guarantee on any replacement parts or product ends at the original expiry date.
- For trims or consumable items we reserve the right to supply replacement parts only.

The guarantee does not cover:

- Call out charges for damage or defects caused by incorrect installation, frost damage, mildew, limescale, corrosion, lack of maintenance, improper use, inappropriate cleaning (please refer to our Care and Maintenance Instructions) or where no fault has been found with the product.
- Compensation for loss of use of the product or consequential loss of any kind.
- Damage or defects caused if the product is repaired or modified by persons not authorised by us or our appointed representative.
- Wear and tear.
- Accidental or wilful damage.
- Products purchased ex-showroom display.
- Costs of removal of the product following installation and/or reinstallation of any replacement product (or part) including without limitation, tiling costs.

IMPORTANT! TRAYS MUST BE INSPECTED FOR DEFECTS AND/OR DISTORTION PRIOR TO INSTALLATION. THIS GUARANTEE DOES NOT COVER THE COSTS OF REMOVAL AND/OR REINSTALLATION WHERE A DEFECT WOULD HAVE BEEN DISCOVERED BY INSPECTION PRIOR TO INSTALLATION.

What to do if something goes wrong

If your product does not function correctly when you first use it, contact your installer to check that it is installed in accordance with the instructions in this manual.

If this does not resolve the issue, contact us for help and advice.

Helpdesk Service - Contact our Customer Services Team for product advice, to purchase spare parts or accessories or to set up service visit. We will need you to have your model name or number and date of purchase.

Mira Showers Website (www.mirashowers.co.uk)

Visit our website to register your guarantee, download user guides, diagnose faults, purchase our full range of accessories and popular spares, or request a service visit.

Spares and Accessories - We hold the largest stocks of genuine Mira spares and accessories. Contact us for a price or visit our website to purchase items from our accessory range and popular spares.

To Contact Us: UK

0844 571 5000

Fax: 01 242 282595

E-mail: Visit **www.mirashowers.co.uk/contactus**

Mira Customer Services Dept, Cromwell Road, Cheltenham, Gloucestershire, GL52 5EP

To Contact Us: Eire Only

01 531 9337

E-mail: CustomerServiceEire@mirashowers.com

Mira is a registered trade mark of Kohler Mira Limited.
The company reserves the right to alter product specifications without notice.

©Kohler Mira Limited, September 2014