Step 3 - Attaching the doors

- Please refer to door installation instructions provided.

GUARANTEE

We have taken great care to ensure that this product reaches you in perfect condition. However should any parts be damaged or missing, please contact your point of purchase. This does not affect your statutory rights.
In addition, if you require replacement parts your point of purchase will be happy to assist.

Wall & Mirrored Wall Units Installation Instructions

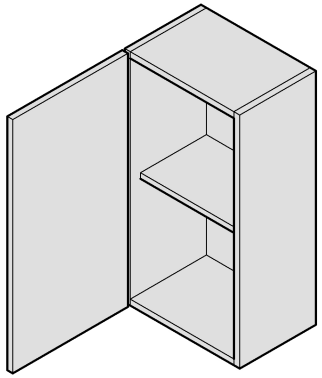

300 Wide Wall Unit

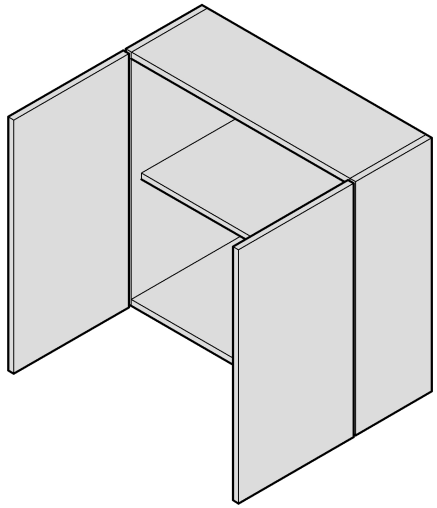

600 Wide Wall Unit

Please note: Images are for illustration purposes only

Please read carefully before attempting to install the unit. This leaflet contains instructions which must be made available to the end user.

Please check product for imperfections before installing.
Please contact your point of purchase if an imperfection is found.

GENERAL SAFETY INSTRUCTIONS

REMEMBER

- Handle product with care.
- When drilling walls, check first for hidden pipes and cables.
- Use safety eyewear when drilling.
- Keep all small parts away from children.
- If the product is over 20 kg (see packaging), 2 people are required to carry and install the unit.

IMPORTANT NOTES

- Ensure all cut outs for plumbing are carried out prior to installation.
- All exposed edges of timber need to be treated or sealed using PVA.

Fixing and fittings supplied

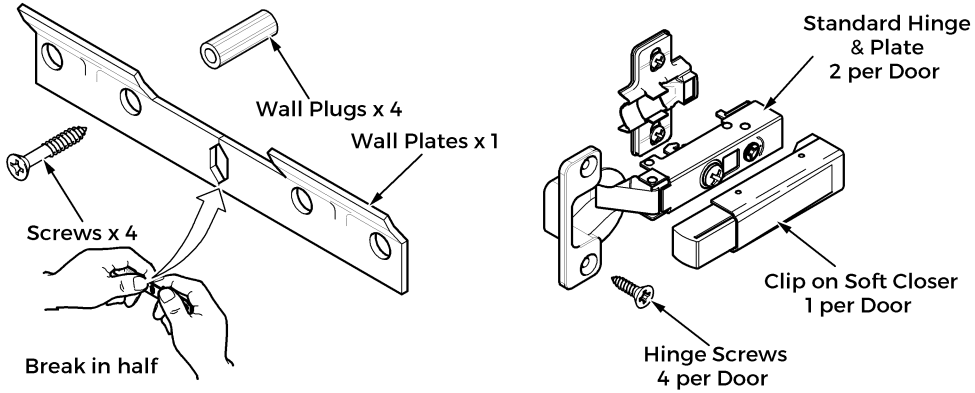

Tools Required (not supplied)

- Pozidrive Screwdriver

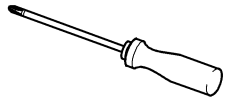

- Hammer

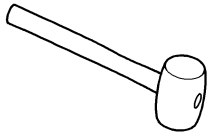

- Power Drill & 5mm Bit

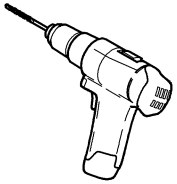

- Tape Measure

- Spirit Level

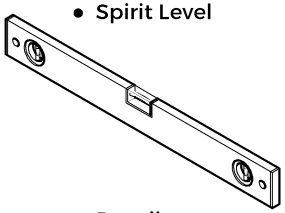

- Pencil

Step 1 - Wall Fixings

- Decide on the height of the Mirror Unit and, using a spirit level, draw a horizontal line to work to (1).
- Mark out the internal dimensions of the unit making sure the plates are within the internal dimensions of the unit by 2-3 mm (2).
- Using a Power Drill along with the Wall Plugs and Screws provided, fix the plates in place.
- If the wall is not solid, you will need to use your own fixings. Ensure that they are adequate to support the total weight of the Unit as stated on the packaging.

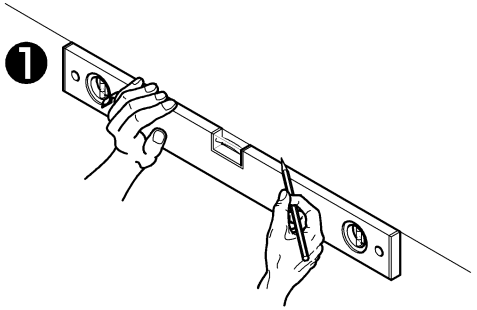

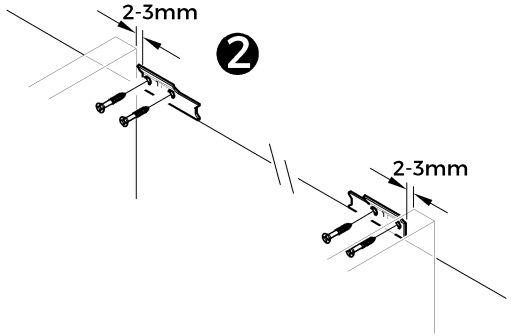

Step 2 - Hang Unit

- Hang the unit on the Wall Mounting plates (3).
- Remove the back mirror panel. Level the unit using your spirit level and adjusting the screw on the bottom of the Hanging Bracket (4).
- Once level, screw on the front of the Hanging Bracket to tighten the Unit to the wall (5).
- Replace the removable back mirror panel.

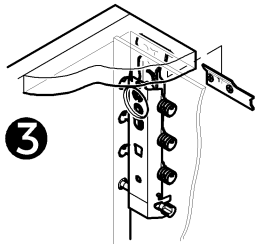

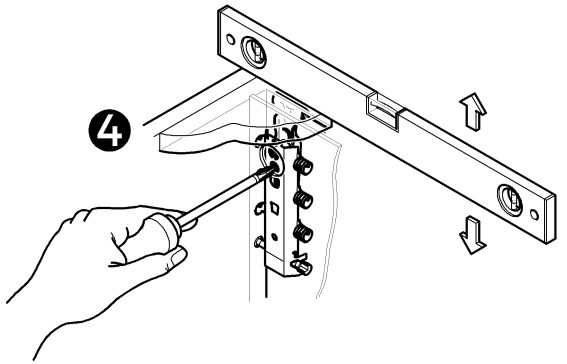

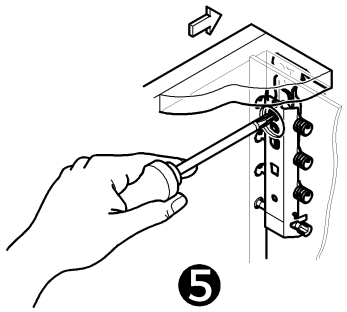

Step 4 - Adjust Hinge

- If the Door requires alteration, adjust screws on the Hinge to required level.

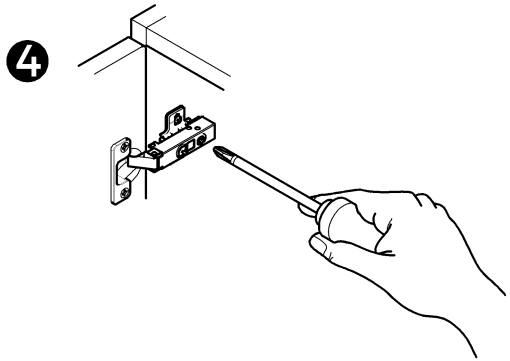

Step 5 - Fitting the Handle

- Attach Handle using Screws provided with Handle.

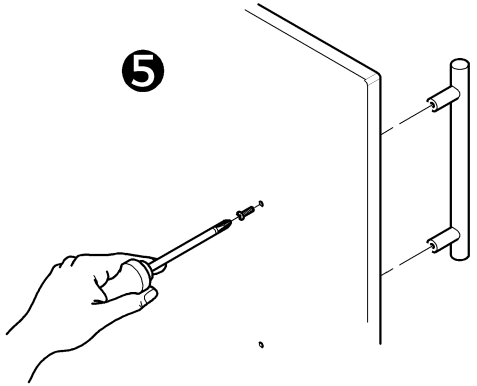

GUARANTEE

We have taken great care to ensure that this product reaches you in perfect condition. However should any parts be damaged or missing, please contact your point of purchase. This does not affect your statutory rights.
In addition, if you require replacement parts your point of purchase will be happy to assist.

Door Installation Instructions

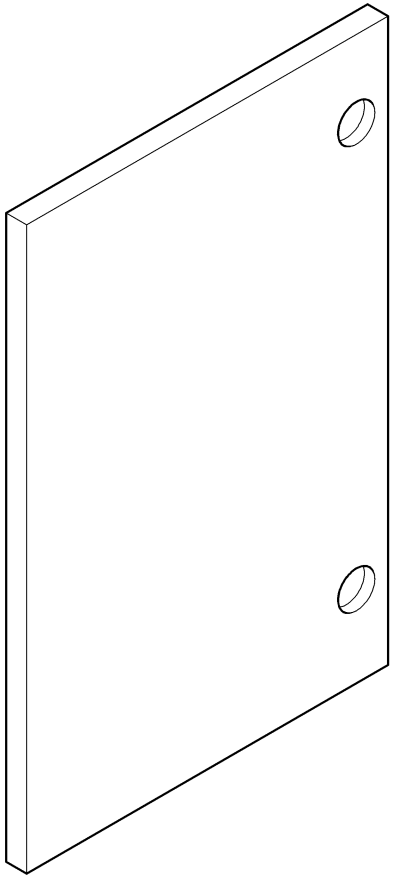

Please note: Images are for illustration purposes only

Please read carefully before attempting to install the door. This leaflet contains instructions, which must be made available to the end user.

Please check product for imperfections before installing.
Please contact your point of purchase if an imperfection is found.

GENERAL SAFETY INSTRUCTIONS

REMEMBER

- Handle product with care.
- Use safety eyewear when drilling.
- Keep all small parts away from children.

Fixing and fittings supplied

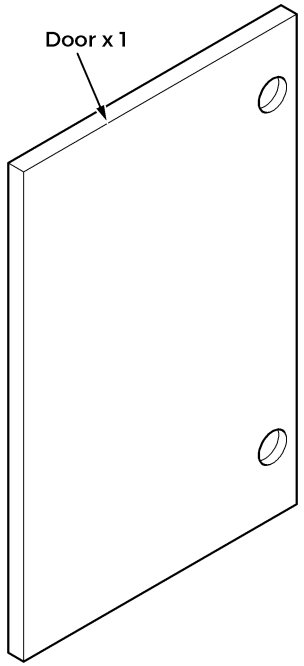

Tools Required (not supplied)

- Pozidrive Screwdriver

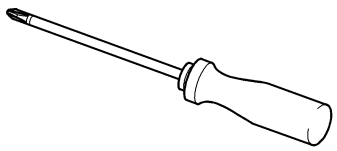

Step 1 - Secure Hinge

- Remove door from packaging and place on a flat surface.
- Ensure that the hinge is securely attached.
- Ensure the plastic film has been removed.

❶

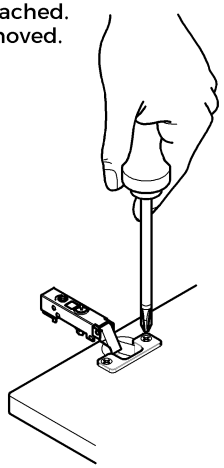

Step 2 - Position Door

- Position the door so that the Hinges align with the Hinge Plate on the Cabinet.
- Before attaching the Hinge to the Hinge Plate, press firmly on the end of the Hinge.

❷

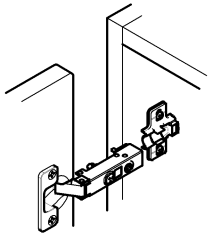

Step 3 - Attach Hinge

- Click Hinge into place on the Hinge Plate.
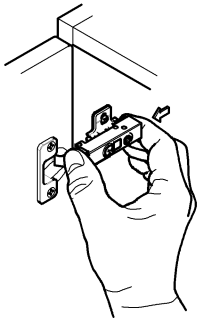
❸