Stelrad® Safety Series

LST i PLUS

The Stelrad LST i Plus completes the popular LST range and offers improved heat outputs. It's simple and quick to install with an attractive, flat panel outer casing, which is totally reversible to allow for piping flexibility. All specified components are supplied in one robust package and the smooth surface is coated in anti-bacterial paint as standard.

RANGE	*72*
TYPES	*K1, P+, K2*
CASING HEIGHTS (MM)	*500, 650, 800*
CASING LENGTHS (MM)	*650 - 2050*
OUTPUTS (WATTS)	*196 - 2767*
OUTPUTS (BTU/HR)	*669 - 9441*
WORKING PRESSURE	*10 bar*

5 YEAR WARRANTY ON CASING

10 YEAR WARRANTY ON EMITTER

BIM AVAILABLE

CPD AVAILABLE

BE
PUNCTUAL

LST Radiators

Stelrad Safety Series

Stelrad has created a range of Low Surface Temperature radiators which provide the perfect solution for all specification requirements in safety critical environments.

The complete choice

Stelrad LST range offers you the flexibility you need

- The LST Standard leaves you free to specify your preferred controls
- The LST i Plus offers an integral remote sensing thermostat valve, the highly specified Danfoss RAS-D Remote Sensor
- The LST Vertical is ideal where space is at a premium
- An arthritic adaptor is supplied as standard for less able environments - along with a lockshield valve which can only be adjusted with a 6mm Allen key, hidden with a neat metal dust cover to discourage unauthorised tampering. (excludes LST Standard)

The complete package

- Every Stelrad LST radiator is supplied with an attractive, flat panel outer casing, which is totally reversible to allow piping flexibility
- Simple and quick to install, the casing is held by security fittings with a unique seam fixing bracket system to prevent unauthorised access to the emitter accommodated inside
- For added protection, the smooth surface is coated in anti-bacterial paint
- The emitter provides high outputs through convection for outstanding heating performance
- Controlled independent laboratory testing ensures that each emitter is guaranteed to perform to a maximum working pressure of 116 psi (8 bar)and conform to BS EN 442, the European Standard for radiators
- All specified components required supplied in one robust package

Anti-bacterial paint

- Every LST emitter is subjected to a multi-stage cleaning process before the paint is applied. This involves several rinsing stages, including an iron phosphate and demineralisation phase. The first coat of paint is applied by electrophoresis and the radiator is then stoved and cooled
- Followed by a second powder coat in warm white, the emitter then goes through a final curing stage. It is then allowed to cool prior to packaging
- All exposed painted surfaces are finished in a long lasting anti-bacterial coating

LST i Plus

Remote sensing thermostatic valve

- The Danfoss RAS-D Remote Sensor is designed specifically for commercial heating systems and can be pre-set to allow adjustment of room temperature between 5°C and 26°C
- Special tools are not required, as the valve is gland seal removable
- Suitable for both ½" steel and 15mm copper piping, with left or right hand, same end connections for flow and return, gives flexibility of installation

Lockshield valve

- Able to withstand 10 bar static pressure, the valve has a drain tap adaptor available, which can also be used as a filling point
- Mandatory fittings should be used in order to comply with current water regulations

Connections

- 2 x ½" connections as standard, complete with Danfoss remote sensing thermostatic radiator valve, pre-piped with 2 x ½" BSP connections at 50mm centres positioned at either left or right of the casing

5 YEAR WARRANTY ON CASING

10 YEAR WARRANTY ON EMITTER

CPD AVAILABLE

BIM AVAILABLE

EN EURONORM 442

CE

For further information and advice call 0844 543 6200

LST Radiators

Stelrad Safety Series

LST Standard, LST i Plus & LST Vertical temperature table

For systems not operating at Δt50 the factors in the table below should be applied. The output of a given radiator can be obtained by multiplying the quoted Δt50 output

by the operating factor. Conversely, to derive a non Δt50 output, divide the heat output required by the relevant operation factor. This 'Δt50 equivalent output' can then be used to select a radiator from the standard tables.

	°C		°F
Δt	Operating Factor	Δt	Operating Factor
5	0.050	10	0.057
10	0.123	20	0.142
15	0.209	30	0.240
20	0.304	40	0.348
25	0.406	50	0.466
30	0.515	60	0.590
35	0.629	70	0.721
40	0.748	80	0.858
45	0.872	90	1.000
50	1.000	100	1.147
55	1.132	110	1.298
60	1.267	120	1.454
65	1.406	130	1.613
70	1.549	150	1.776
75	1.694	-	-

Example: Exact output at Δt50 = 2000 Btu/hr
Output at Δt30 = 2000 x 0.515 = 1030 Btu/hr
Average coefficient of 130 is used in the example above

Testing and operating pressures

All models are high pressure tested to withstand 152.3 psi (10.5 bar). Strictly controlled independent laboratory testing ensures that all Stelrad radiators are guaranteed to perform to a maximum working pressure of 116 psi (8 bar) at a maximum temperature of 95°C. All conform to BS EN 442 - the European Standard for radiators.

Caution

To ensure that the emitter complies with all aspects of the NHS guidance for "Safe hot water and surface temperature", Stelrad recommends that a maximum flow temperature of 80° be used with a 20° drop across the system.

When designing for domestic systems we recommend that the Stelrad LST range be used only in heating systems complying with the British Standard Code of Practice for Central Heating for Domestic Premises BS EN 12828:2003 and BS EN 12831:2003. Single feed, indirect cylinders are not recommended as should interchange of water occur, fresh aerated water would enter the heating system, resulting in corrosion.

Water treatment

On completion of the installation, the system should be properly flushed and filled in accordance with the British Standard Code of Practice BS 7593:2006 for the Treatment of Water in Domestic Hot Water Central Heating Systems, Part L of Building Regulations and Good Practice Guidance for Scotland.

After installation of a new Stelrad radiator the central heating system should be cleaned and flushed with cleaner to remove existing contaminants, flux residue and other installation debris which, if left, can cause damage to the new radiator. Afterwards, treat the system with an inhibitor to ensure long term protection against corrosion and limescale.

A comprehensive range of quality chemicals including inhibitors, cleaners, leak sealers and noise reducers that protect and maintain central heating systems can be obtained from:

Sentinel Performance Solutions Ltd
7650 Daresbury Park,
Warrington, Cheshire, WA4 4BS,
www.sentinelprotects.com

Fernox
Unit 2 Genesis Business Park, Albert Drive,
Sheerwater, Woking, Surrey, GU21 5RW
www.fernox.com

Pressure drops

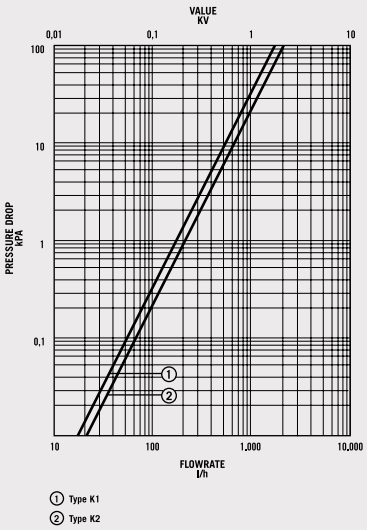

LST i Plus

Stelrad Safety Series

50 Δt

(75/65/20°C)

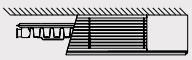

K1

P+

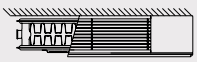

K2

Casing Height mm	Casing Length mm	Emitter Height mm	Emitter Length mm	Stelrad UIN	Heat output Watts	Heat output Btu/hr	Stelrad UIN	Heat output Watts	Heat output Btu/hr	Stelrad UIN	Heat output Watts	Heat output Btu/hr
500	650	300	400	145200	196	669	145248	284	969	145224	348	1187
	850	300	600	145201	293	1000	145249	426	1454	145225	522	1781
	1050	300	800	145202	391	1334	145250	568	1938	145226	696	2375
	1250	300	1000	145203	489	1668	145251	710	2423	145227	870	2968
	1450	300	1200	145204	587	2003	145252	852	2907	145228	1044	3562
	1650	300	1400	145205	685	2337	145253	994	3392	145229	1218	4156
	1850	300	1600	145206	782	2668	145254	1136	3876	145230	1392	4750
	2050	300	1800	145207	880	3003	145255	1278	4361	145231	1566	5343
650	650	450	400	145208	290	989	145256	386	1317	145232	478	1631
	850	450	600	145209	435	1484	145257	580	1979	145233	717	2446
	1050	450	800	145210	580	1979	145258	773	2637	145234	956	3262
	1250	450	1000	145211	725	2474	145259	966	3296	145235	1195	4077
	1450	450	1200	145212	870	2968	145260	1159	3955	145236	1434	4893
	1650	450	1400	145213	1015	3463	145261	1352	4613	145237	1673	5708
	1850	450	1600	145214	1160	3958	145262	1546	5275	145238	1912	6524
	2050	450	1800	145215	1305	4453	145263	1739	5933	145239	2151	7339
800	650	600	400	145216	365	1245	145264	501	1709	145240	615	2098
	850	600	600	145217	548	1870	145265	751	2562	145241	922	3146
	1050	600	800	145218	730	2491	145266	1002	3419	145242	1230	4197
	1250	600	1000	145219	913	3115	145267	1252	4272	145243	1537	5244
	1450	600	1200	145220	1096	3740	145268	1502	5125	145244	1844	6292
	1650	600	1400	145221	1278	4361	145269	1753	5981	145245	2152	7343
	1850	600	1600	145222	1461	4985	145270	2003	6834	145246	2459	8390
	2050	600	1800	145223	1643	5606	145271	2254	7691	145247	2767	9441

Δt50 is the UK's industry standard for heating outputs, which has an operating temperature of 75/65/20ºC. If you have a low temperature heat source you may wish to consider Δt40 or Δt30 output (see your installer or system designer or download from www.stelrad.com).

EN 442 CERTIFICATION DATA - CETIAT TESTED IN ACCORDANCE WITH BS EN 442

Type	K1			P+			K2		
Casing height	500	650	800	500	650	800	500	650	800
Emitter height	300	450	600	300	450	600	300	450	600
W/m at 75/65/20	489	725	913	710	966	1252	870	1195	1537
n-coefficients	1.19	1.25	1.34	1.24	1.27	1.31	1.27	1.30	1.32
Heated surface area (m^2/m)	2.09	3.37	4.66	2.44	3.84	5.24	3.51	5.62	7.74
Weight (kg/m)	17.80	23.50	29.40	22.70	30.72	38.40	24.40	33.30	42.50
Water contents (l/m)	1.89	2.57	3.25	3.70	5.15	6.60	3.70	5.15	6.60

LST i Plus

Stelrad Safety Series

COMPONENTS

LST i Plus front case view.

LST i Plus inside the casing showing the emitter.

LST i Plus oblong knockout for pipe.

Optional cover cap to discourage unauthorised tampering.

An arthritic adaptor is supplied as standard for special needs environments.

An arthritic adaptor is supplied as standard for special needs environments.

Includes Danfoss RA-2000 TRV and copper pipe configuration.

The remote sensing thermostatic valve gives accuracy of operation and the limiting device is completely hidden to prevent the maximum temperature being exceeded.

WALL FIXINGS AND BRACKET POSITIONS

All dimensions in mm. Inches in brackets.

Casing Length mm	Casing Height mm
650	500
850	650
1050	800

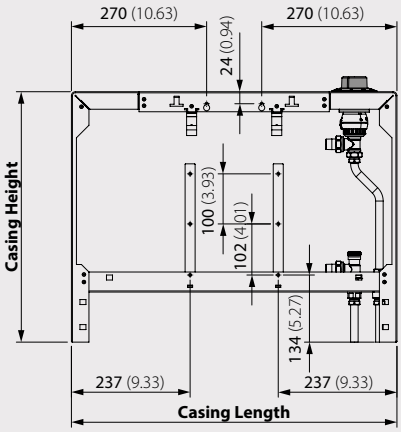

Casing Length mm	A mm	B mm
1250	415	448
1450	515	548
1650	615	648
1850	715	748
2050	815	848

Casing Height mm
500
650
800

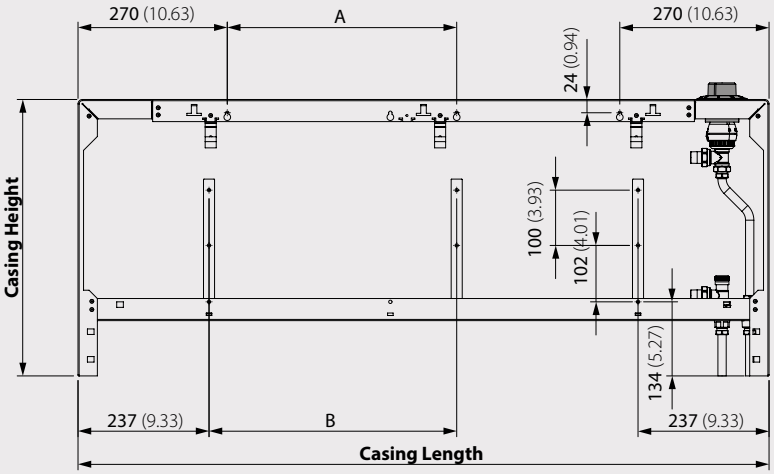

LST i Plus

Stelrad Safety Series

CONNECTION OPTIONS

Each radiator comes with ½" inlet connections as standard.
All dimensions in mm. Inches in brackets.

CONTROL ON RIGHT-HAND SIDE

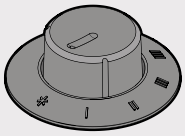

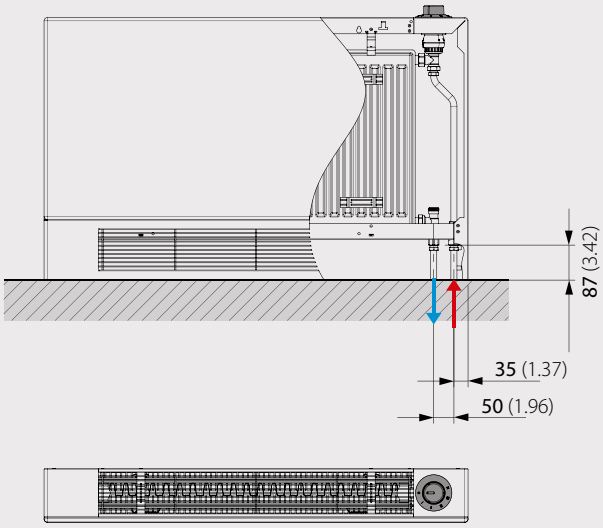

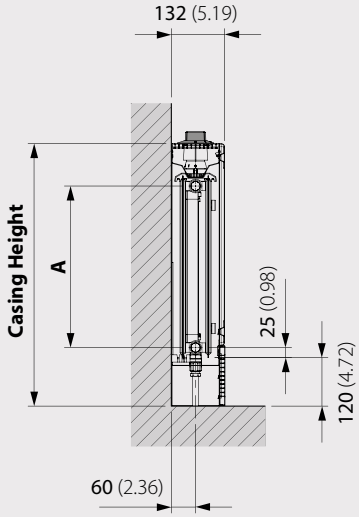

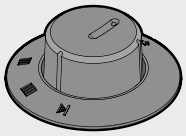

CONTROL ON LEFT-HAND SIDE

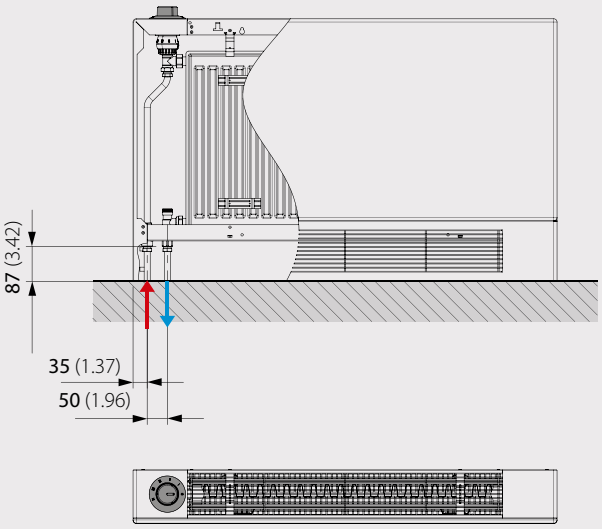
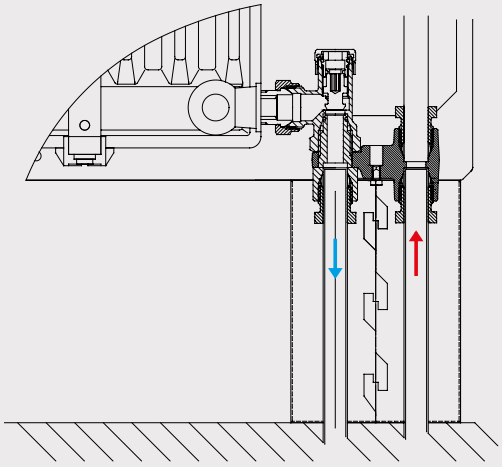
PIPE CONFIGURATIONS