Mira Mode User Interface
Mira Mode Remote ON/OFF Button

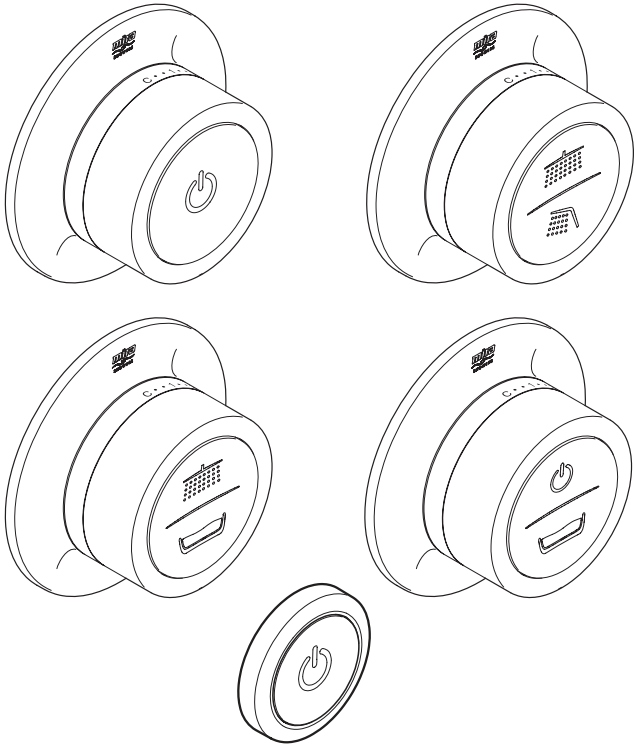

Installation and User Guide

Please leave these instructions with the user

Showering perfection

mira SHOWERS

If you experience any difficulty with the installation or operation of your new shower, then please refer to the **Fault Diagnosis** section, before contacting **Kohler Mira Ltd**. Our telephone and fax numbers can be found in the back of this guide.

Important Information

Products manufactured by Kohler Mira Ltd are designed to be safe, provided that they are installed, used and maintained in good working order, in accordance with our instructions and recommendations.

Follow all warnings, cautions and instructions contained in this guide, and on, or inside the product. Failure to follow the instructions provided with this product will invalidate the guarantee.

WARNING!

TO REDUCE THE RISK OF FIRE, ELECTRIC SHOCK OR INJURY:

Installation

1. Installation of the User Interface and the Remote On/Off (if supplied) must be carried out in accordance with these instructions by qualified, competent personnel. Read all instructions before commencing installation.
2. Isolate the electrical and water supplies before commencing installation.
3. Mains connections are exposed when the valve module cover is removed.
4. **DO NOT** perform any unspecified modifications, drill or cut holes in the product other than instructed by this guide. When servicing only use genuine Kohler Mira replacement parts.
5. **DO NOT** modify or extend the cables supplied with the product.

Using the Product

1. The Mira Mode must be operated and maintained in accordance with the requirements of this guide. Make sure you fully understand how to operate the product before use, read all user's instructions and retain this guide for future reference.
2. **DO NOT** operate the product if water is leaking from inside the valve module. Isolate electrical and water supplies to the product and refer to the fault diagnosis section.
3. **DO NOT** apply power to the product if it is thought to have been exposed to freezing conditions. Isolate electrical and water supplies to the product and contact Kohler Mira Ltd.

4. The Mira Mode can be used by children aged from 8 years and above and persons with reduced physical, sensory or mental capabilities or lack of experience and knowledge if they have been given supervision or instruction concerning the use of the appliance in a safe way and understand the hazards involved.
5. **DO NOT** allow children to play with the product.
6. **DO NOT** allow children to clean or perform any user maintenance without supervision.
7. Always check the water temperature is safe before bathing or showering.
8. **DO NOT** remotely operate or alter any of the Mira Mode shower and bathing settings if it is already occupied and / or being used by another person.
9. **DO NOT** “top up” the bath while in use.

Guarantee

The Mira Mode has been designed for domestic use only, it is not recommended for Commercial or Healthcare use.

For domestic installations, Kohler Mira Limited, guarantee the Mira Mode against any defect in materials or workmanship for a period of five years from the date of purchase (shower fittings for one year).

Specifications

User Interface	
Electrical Supply	12 Vdc SELV 2W max. derived from valve module
Ingress Protection	IP X4 – Suitable for installation in Zone 1
Maximum Ambient Temperature	40 °C

Remote ON/OFF (if supplied)	
Electrical Supply	3.3 Vdc SELV 2mW max. derived from valve module
Ingress Protection	IP X4 – Suitable for installation in Zone 1
Maximum Ambient Temperature	40 °C

Product Descriptions

Four versions of the interface are available and a Remote ON/OFF button. Basic functions are described below:

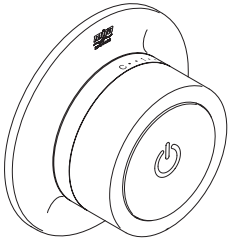

Single Outlet Shower - 1874.202

On/Off Button - Turns product On/Off.

Rotary movement selects showering temperature.

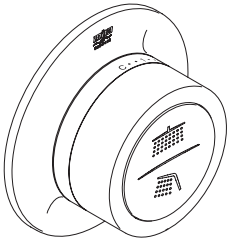

Dual Outlet Shower - 1874.203

Shower Overhead Symbol (Top Button) – Turns Product Overhead On/Off.

Shower Handset Symbol (Bottom Button) – Turns Product Handset On/Off.

Rotary movement selects showering temperature.

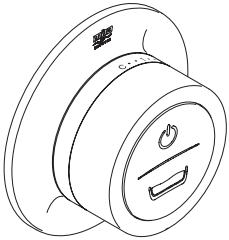

Single Outlet Bath Fill - 1874.204

On/Off Symbol (Top Button) – Turns Product Bath Fill On/Off.

Bath Symbol (Bottom Button) – Turns Product Bath Fill Preset On/Off.

Rotary movement selects showering temperature.

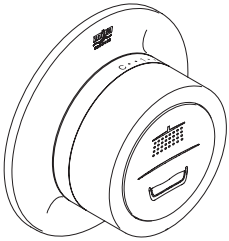

Dual Outlet Bath Fill - 1874.205

Shower Symbol (Top Button) – Turns Product Shower On/Off.

Bath Symbol (Bottom Button) – Turns Product Bath Fill Preset On/Off.

Rotary movement selects showering temperature.

Remote ON/OFF Button - 1874.242

On/Off Button - Turns product On/Off from outside the showering area.

The remote On/Off button is optional and is not necessary for the product to operate.

Pack Contents Interface

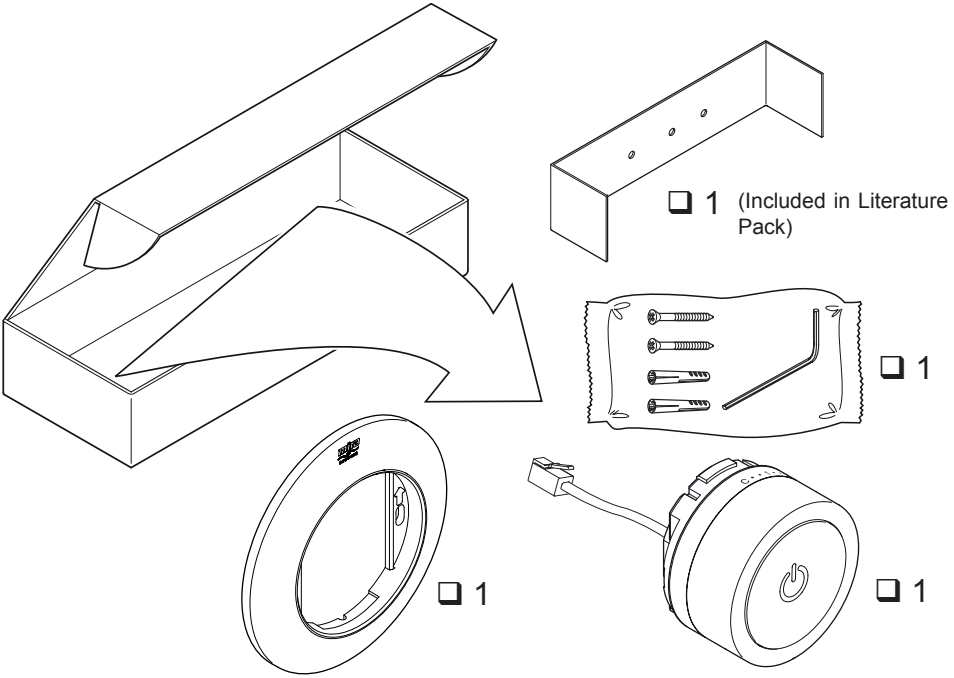

Pack Contents ON/OFF Button

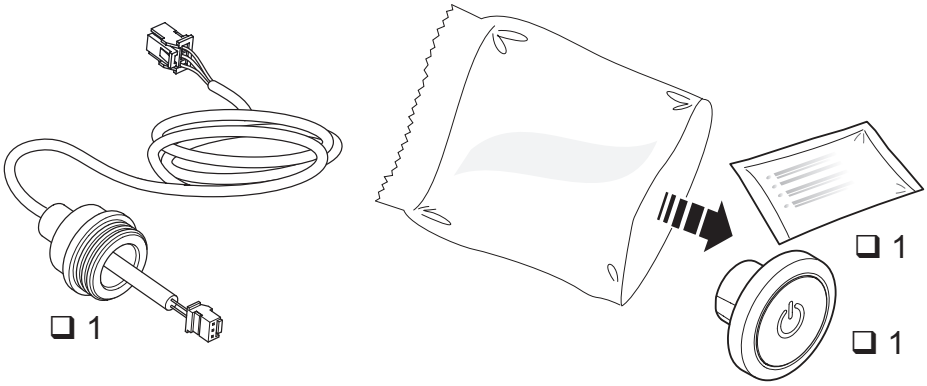

Dimensions

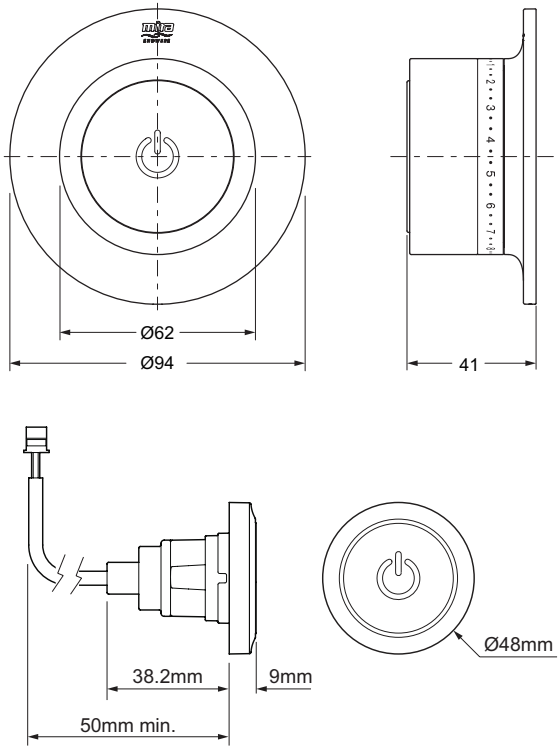

Refer to Digital Mixing Valve Installation guide for schematic.

Install the Interface

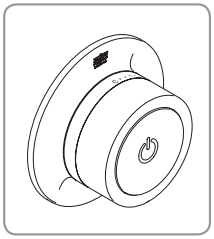

1

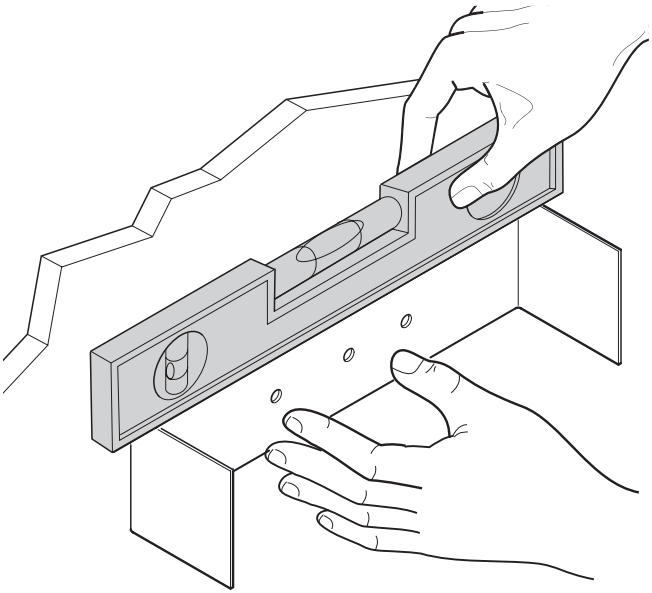

Position the installation template (supplied) at the position on the wall where you intend to install the interface. Make sure that the template is level.

2

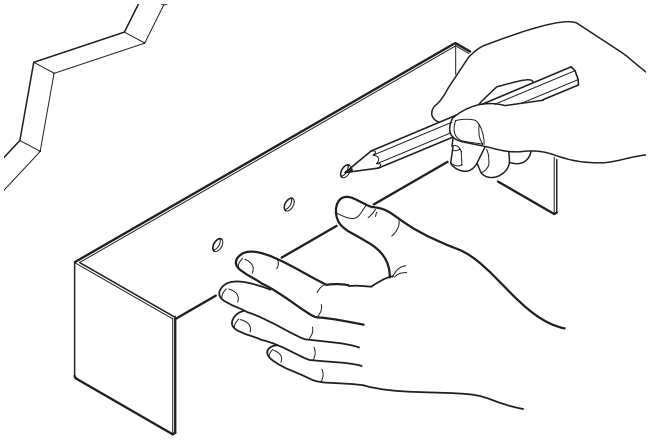

Mark the positions of the fixing holes on the wall.

3

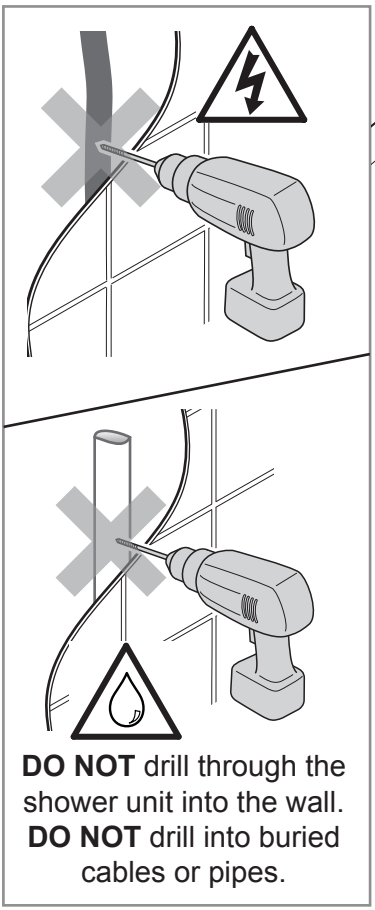

DO NOT drill through the shower unit into the wall.
DO NOT drill into buried cables or pipes.

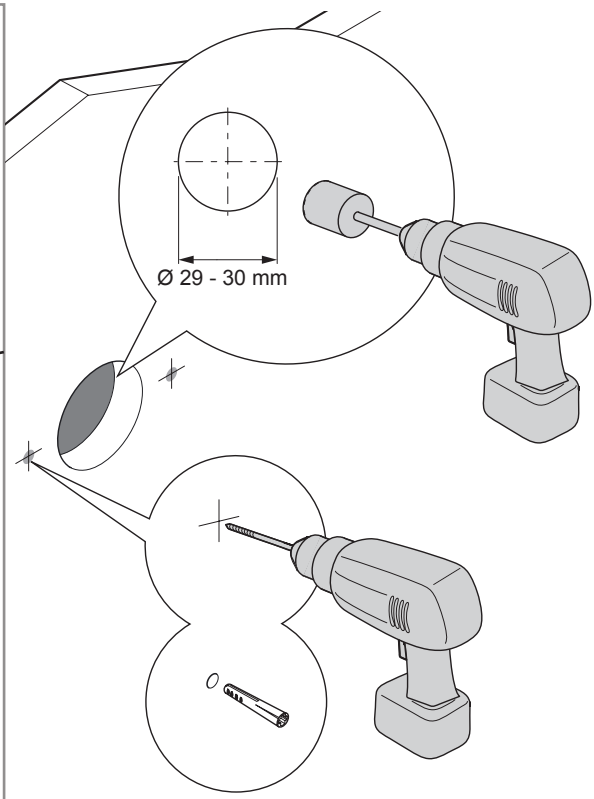

Caution! Be aware of hidden pipes or cables.

For solid walls drill the fixing holes for the backplate with a 6 mm drill and insert the wall plugs (supplied). For other types of wall structure alternative fixings may be required (not supplied).

NOTE! THE INTERFACE MUST BE INSTALLED ON A FLAT AND EVEN WALL SURFACE AVOIDING ANY GROUT LINES.

Using a suitable hole saw, drill the hole for the interface cable as per the dimensions given.

Route the cable from the digital valve through the wall.

Note! Cables routed through wall cavities, chased into solid walls, directed under baths or in attic spaces **must** be fitted in such a way so that they can later be removed. To facilitate this appropriate cable conduit / trunking **must** be used at all times. Failure to do so may result in an inability to carry out any maintenance or service. Safe and easy access to the product should be available at all times.

4

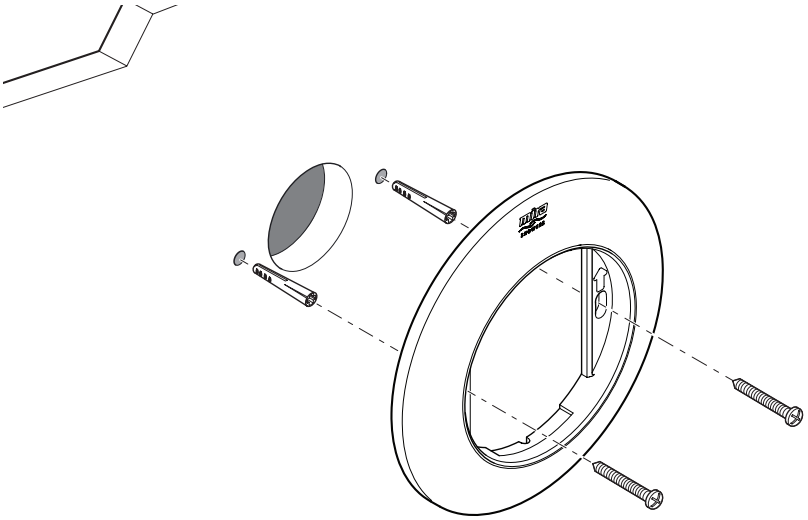

Fit the backplate to the wall in the orientation shown using the fixing screws (supplied). Tighten by hand, do not over tighten.

5

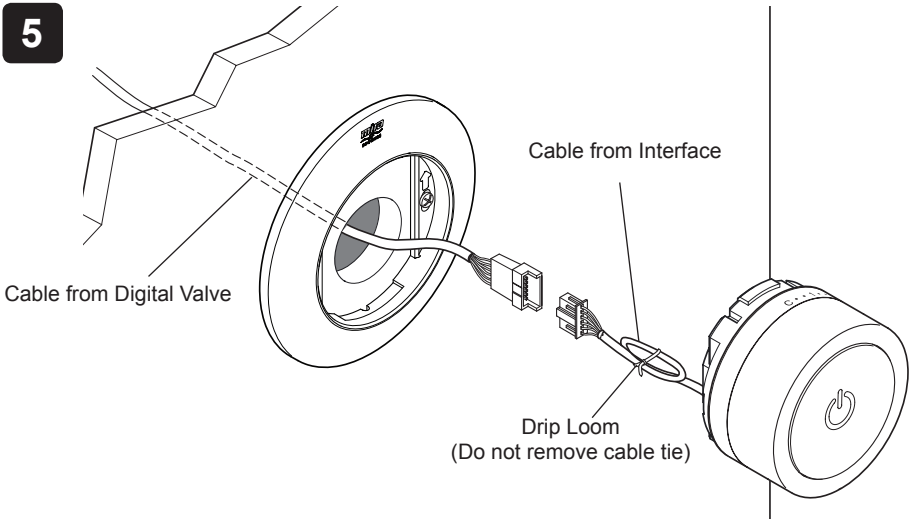

Connect the cable on the back of the interface to the cable that comes from the valve.

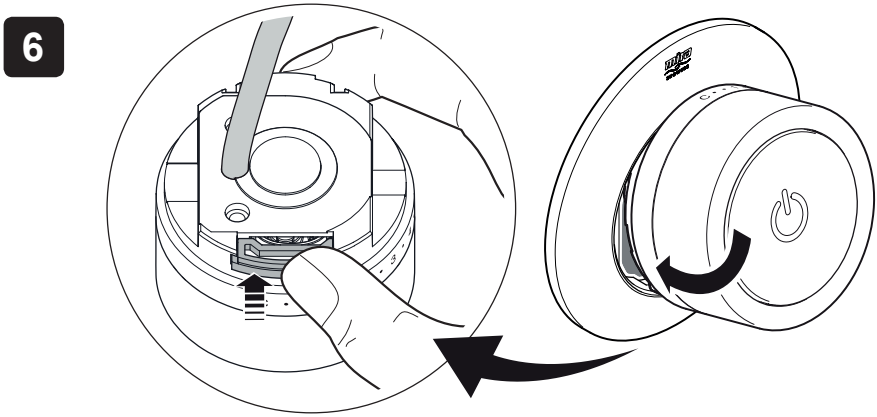

Locate the top of the interface in the backplate and press down on the bottom button as you install in position.

Install the On/Off Button

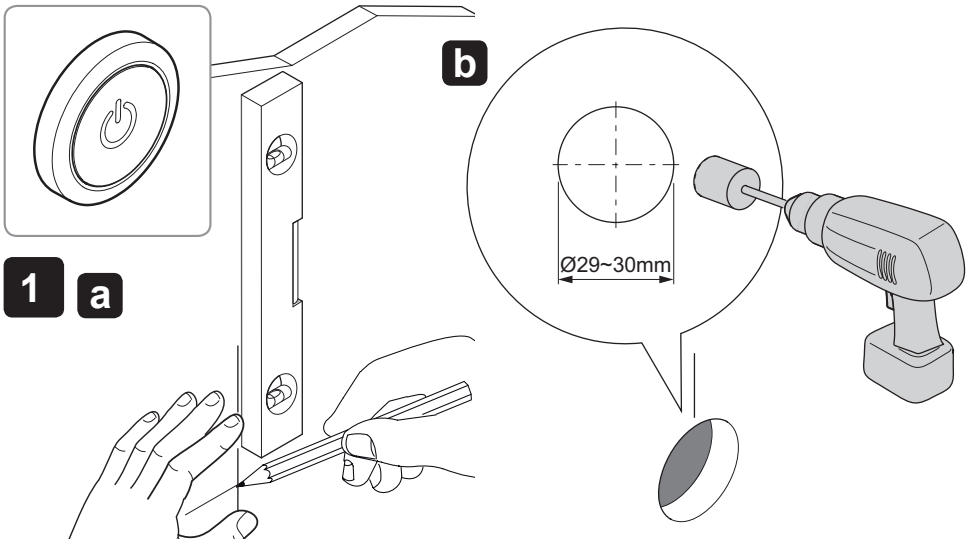

Decide on a suitable location for the ON/OFF button.

Mark the centre position and draw a vertical line using a spirit level to assist in the alignment of the ON/OFF button. Using a suitable hole saw, drill a 29-30 mm diameter hole to a minimum depth of 50 mm.

Note! The ON/OFF button must be installed on a flat and even wall surface avoiding any grout lines.

2

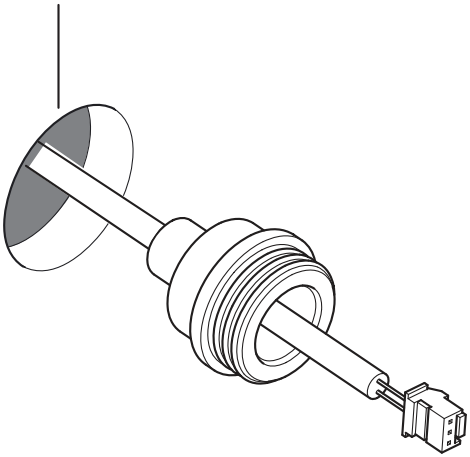

Route the cable from the digital valve through the hole in the wall.

Note! Cables routed through wall cavities, chased into solid walls, directed under baths or in attic spaces **must** be fitted in such a way so that they can later be removed. To facilitate this appropriate cable conduit / trunking **must** be used at all times. Failure to do so may result in an inability to carry out any maintenance or service. Safe and easy access to the product should be available at all times.

3

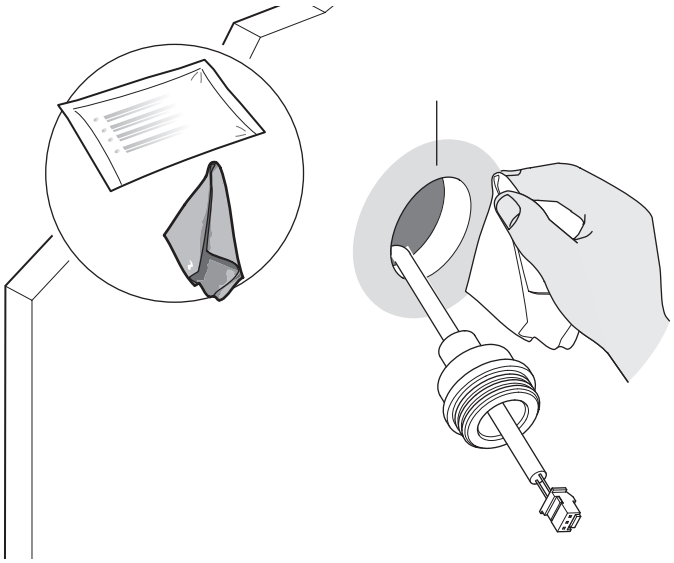

Using the cleaning wipe (supplied) clean the surface around the mounting hole.

Note! Do not remove the line at this stage.

4

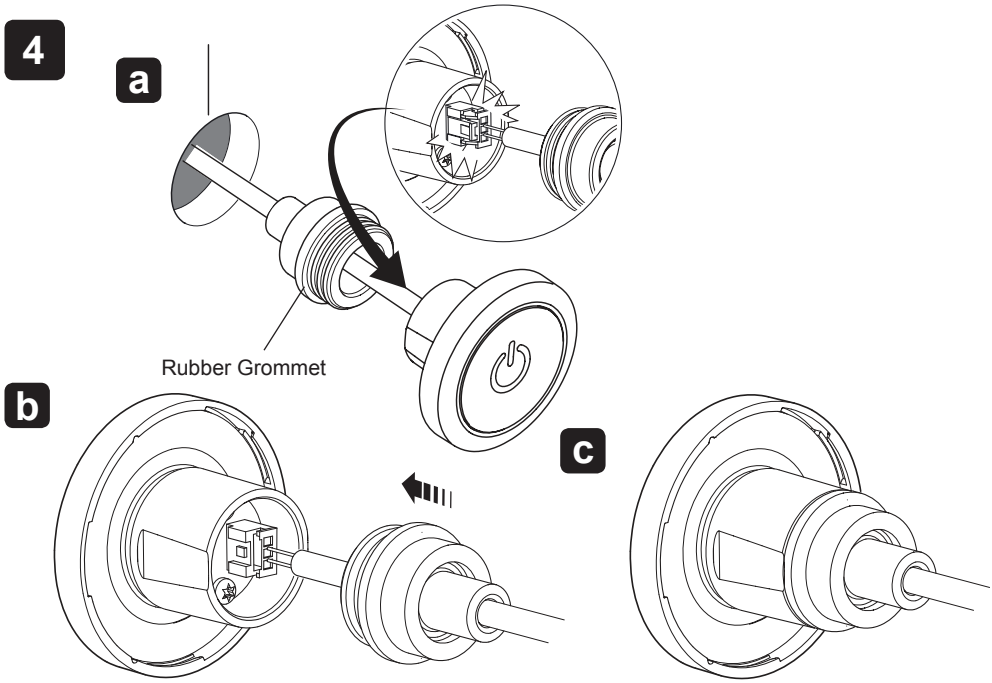

Connect the cable to the back of the ON/OFF button.
Push the rubber grommet into place.
The alignment of the remote ON/OFF button cannot be adjusted when it is fitted. Make sure to test fitment before removing the tape. This will ensure that there is no clearance issue.

5

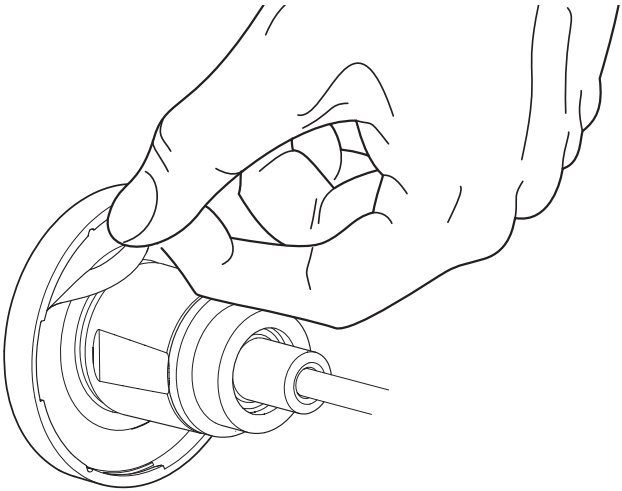

Carefully remove the paper from the adhesive back.

6

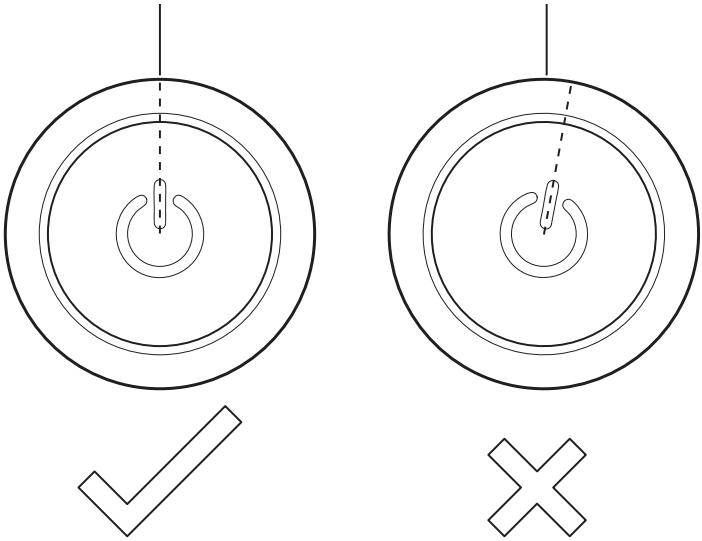

Carefully, visually align the symbol to the vertical line on the wall

Locate into the hole in the wall and push firmly.

Clean off the vertical line once the on/off remote is correctly installed.

If required, the ON/OFF remote button can be removed from the backplate by rotating anticlockwise.

Using the Shower

Note! The factory default maximum temperature is set to 45°C.

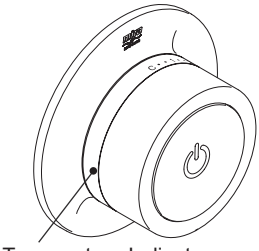

On/Off Button

Turns product On/Off.

Rotary movement selects showering temperature

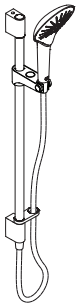

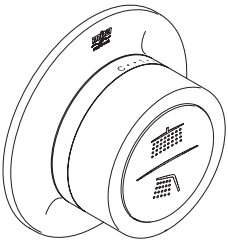

Shower Overhead Symbol - (Top Button) – Turns Product Overhead On/Off.

Shower Handset Symbol

(Bottom Button) – Turns Product Handset On/Off.

Rotary movement selects showering temperature

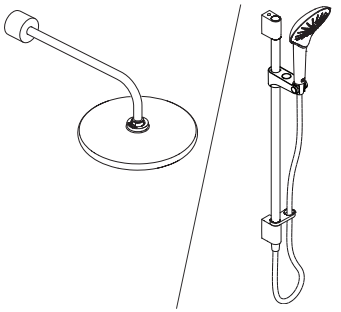

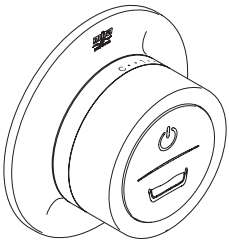

On/Off Symbol

(Top Button) – Turns Product Bath Fill On/Off.

Bath Symbol - (Bottom Button) – Turns Product Bath Fill Preset On/Off.

Rotary movement selects bathfill water temperature

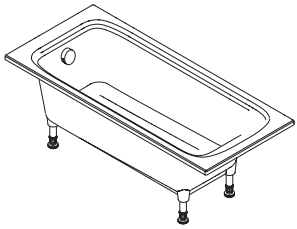

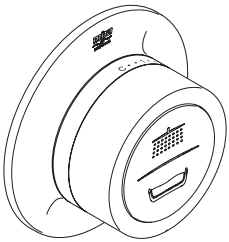

Shower Symbol - (Top Button) – Turns Product Shower On/Off.

Bath Symbol - (Bottom Button) – Turns Product Bath Fill Preset On/Off.

Rotary movement selects showering/bathfill water temperature

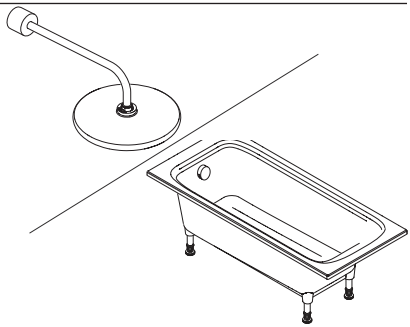

When you turn on the product and water begins to flow, the temperature indicator light will begin to flash to show the product is warming up. Once the preselected outlet temperature has been reached, the indicator light will stop flashing.

Setting Up the Shower

Maximum Temperature Setting with the User Interface

Single Outlet Shower

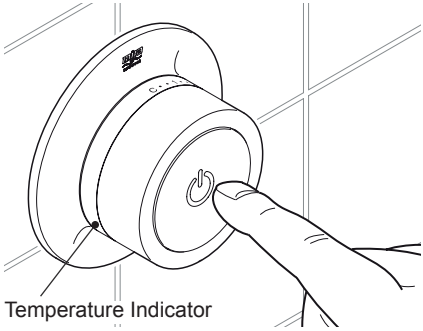

Hold down the On/Off Button for 10 Seconds approx. until the Temperature Indicator light pulses on/off.

Note! After 5 seconds the lights will pulse to indicate pairing mode, you need to continue to hold the button for the entire 10 seconds.

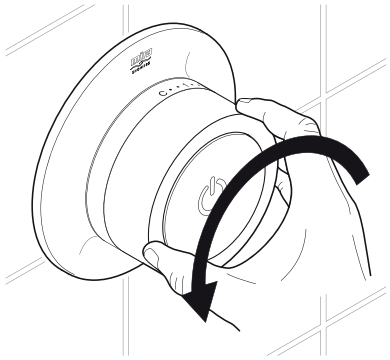

Adjust the temperature indicator in accordance to the table below to set the desired maximum temperature.

Temp Indicator Position	Temp °C
C	Exit No Change
1 - 3	41
4 - 6	45
7 - 9	48
H	Exit No Change

Caution! Make sure that the maximum outlet temperature is suitable and safe for all users.

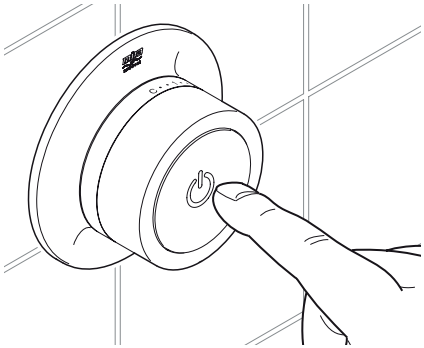

Press the On/Off Button to set the maximum temperature. The temperature indicator light will flash twice to confirm the setting has been completed.

Dual Outlet Shower

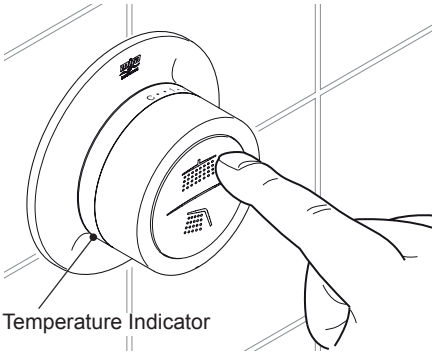

Hold down the Overhead Shower Button (top half) for 10 Seconds approx. until the Temperature Indicator light pulses on/off.

Note! After 5 seconds the lights will pulse to indicate pairing mode, you need to continue to hold the button for the entire 10 seconds.

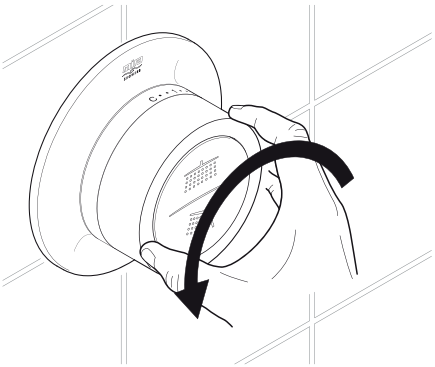

Adjust the temperature indicator in accordance to the table below to set the desired maximum temperature.

Temp Indicator Position	Temp °C
C	Exit No Change
1 - 3	41
4 - 6	45
7 - 9	48
H	Exit No Change

Caution! Make sure that the maximum outlet temperature is suitable and safe for all users.

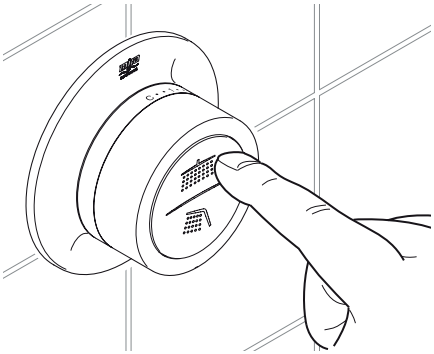

Press the Overhead Shower Button to set the maximum temperature. The temperature indicator light will flash twice to confirm the setting has been completed.

Single Outlet Bathfill

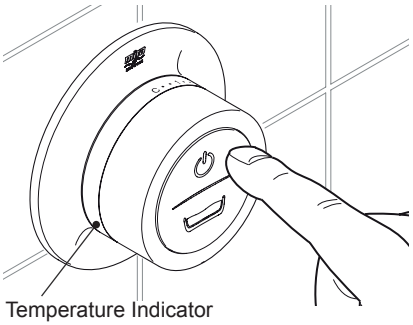

Hold down the On/Off Button (top half) for 10 Seconds approx. until the Temperature Indicator light pulses on/off.

Note! After 5 seconds the lights will pulse to indicate pairing mode, you need to continue to hold the button for the entire 10 seconds.

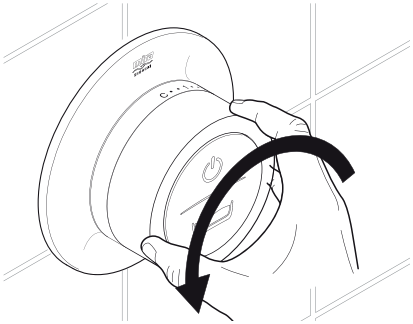

Adjust the temperature indicator in accordance to the table below to set the desired maximum temperature.

Temp Indicator Position	Temp °C
C	Exit No Change
1 - 3	41
4 - 6	45
7 - 9	48
H	Exit No Change

Caution! Make sure that the maximum outlet temperature is suitable and safe for all users.

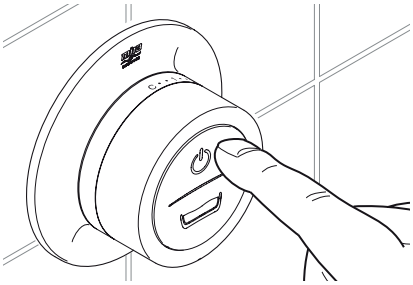

Press the On/Off Button to set the maximum temperature. The temperature indicator light will flash twice to confirm the setting has been completed.

Dual Outlet Bath Fill

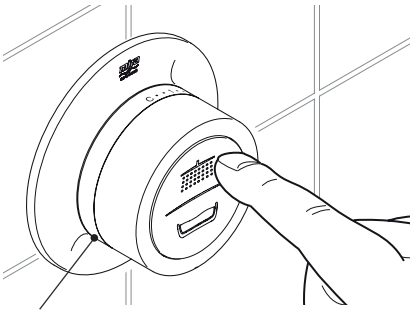

Temperature Indicator

Hold down the Overhead Shower Button (top half) for 10 Seconds approx. until the Temperature Indicator light pulses on/off.

Note! After 5 seconds the lights will pulse to indicate pairing mode, you need to continue to hold the button for the entire 10 seconds.

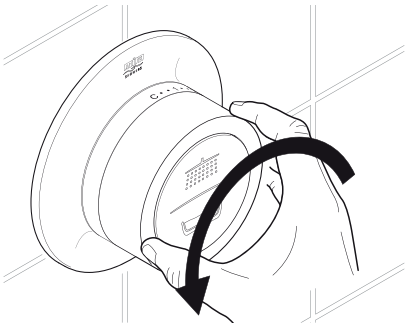

Adjust the temperature indicator in accordance to the table below to set the desired maximum temperature.

Temp Indicator Position	Temp °C
C	Exit No Change
1 - 3	41
4 - 6	45
7 - 9	48
H	Exit No Change

Caution! Make sure that the maximum outlet temperature is suitable and safe for all users.

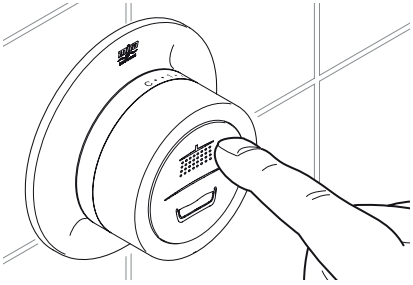

Press the Overhead Shower Button to set the maximum temperature. The temperature indicator light will flash twice to confirm the setting has been completed.

Bathfill Preset Adjustment

For Products with a Bath Fill Shower Interface and Dual Shower/Bath fill Interface

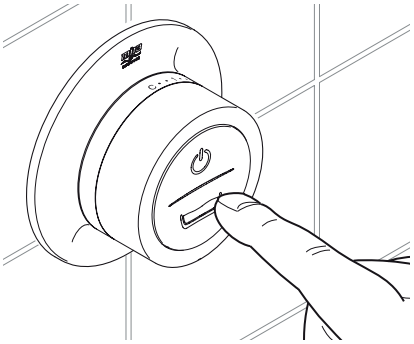

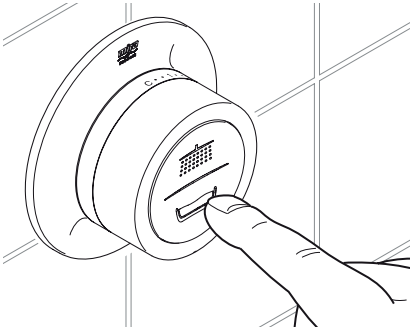

Bath Fill Preset – Push down the plug in the bath. Hold down the Bath Symbol Button (bottom half) for 5 Seconds approx. until the Bath Symbol Button flashes. Press the Bath Symbol Button (bottom half) to start the Bath filling. Rotate the Chrome Bezel to adjust the temperature indicator to set the temperature. On reaching the ideal fill level and desired temperature, press the Bath Symbol Button (bottom half) to stop the water & save the Bath Fill Preset.

Note! Factory Default Bath Fill Preset is 5 minutes duration at 42°C Inlet Temperature.

Bath Fill Preset temperature will calculate the average temperature over the Preset fill duration & take into account adjustments made to the User Interface rotary temperature dial during this time period.

Setting Up the Shower Using a Mobile Phone

You can set up your shower using your iPhone or Android Phone with the Mira Mode App

1 Download the Mira Mode App via the appropriate application store onto your compatible device:

Note! Compatible devices:

Apple iPhone 4S or Newer
iOS Version 8 onwards
Android Devices
Jelly Bean 4.3 onwards

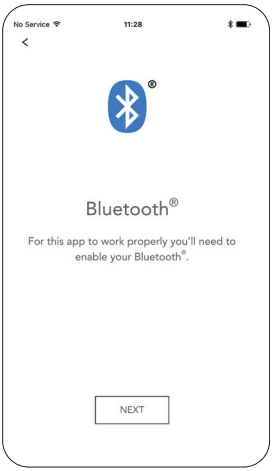

2. Once the Mira Mode App has been installed, open the application on your device and follow the on-screen instructions to connect to your phone to your Digital Mixing Valve

3. You can then use the Mira Mode App to control your Digital Mixer Valve remotely via the water droplet symbol and/or adjust your setting using the gear symbol

Warning! Never remotely operate or alter any of the Mira Mode shower and bathing settings if it is already occupied and / or being used by another person. This could result in flooding of the Shower cubical / bath or scalding of the user.

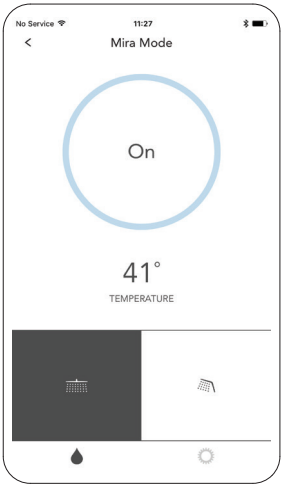

Example Main Control Menu
(Varies by Product)

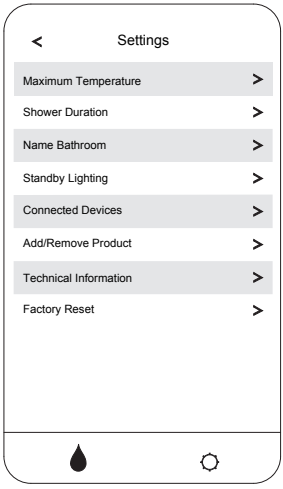

Example Settings Menu
(Varies by Product)

The Bluetooth® word mark and logos are registered trademarks owned by the Bluetooth SIG, Inc. and any use of such marks by Kohler Mira Ltd is under license. Other trademarks and trade names are those of their respective owners.

User Fault Diagnosis

Symptoms	Probable Cause	Possible Remedy
No Lights on interface	Not connected to valve	Check connections
	No power to valve	Check power supply
	Lights turned off in APP	Refer to settings in the APP
	Faulty user interface	Contact Customer Services
Interface Button Flashing (2 times a second)	Stuck button on interface	Contact Customer Services
	Intermittent connection to valve	Check connections
	Digital Mixing Valve fault	Contact Customer Services
	Wrong interface connected	Check the APP **'Technical Information'** Screen. Text will be black if correct red if wrong. Contact Customer Services
Temperature Indicator and Interface button flashing (2 times a second)	Over temperature error	Contact Customer Services
Fault with On/Off remote button	Faulty lead	Contact Customer Services
	Not connected to valve	Check Connections
	Faulty button	Contact Customer Services
All Interface Button Flashing (2 times a second) & Temperature Indicator and Interface button flashing (2 times a second)		Turn off the mains power to the product & reboot after 10 seconds. If the fault is not rectified, then Contact Customer Services.

Cleaning

Many household cleaners contain abrasives and chemical substances, and should not be used for cleaning plated or plastic fittings. These finishes should be cleaned with a mild washing up detergent or soap solution, and then wiped dry using a soft cloth.

Disposal and Recycling

End of Product Life

When this appliance has reached the end of its serviceable life, it should be disposed of in a safe manner, in accordance with current local authority recycling, or waste disposal policy.

This symbol on the product or its packaging indicates that this product should not be disposed of with your other household waste. Instead, it is your responsibility to dispose of your waste equipment by handing it over to a designated collection point for the recycling of waste electrical and electronic equipment. The separate collection and recycling of your waste equipment at the time of disposal will help to conserve natural resources and ensure that it is recycled in a manner that protects human health and the environment. For more information about where you can drop off your waste equipment for recycling, please contact your local council office, your household waste disposal service or the shop where you purchased the product.

Spare Parts

Digital Interface

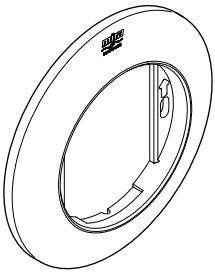

1874.274
Backplate

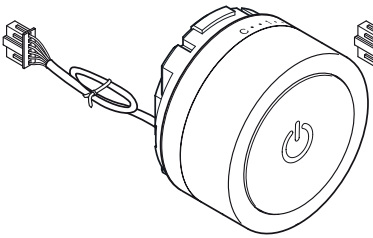

1874.270
Shower Interface

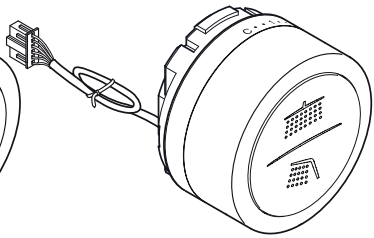

1874.272
Dual Shower Interface

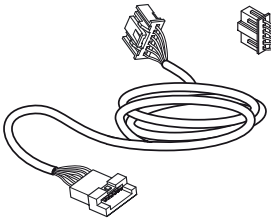

1874.277
Interface Lead

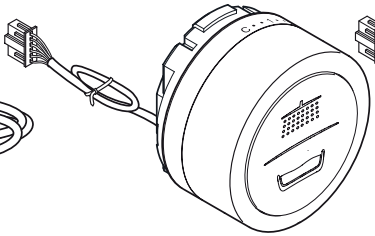

1874.273
Dual Shower/Bath Fill Interface

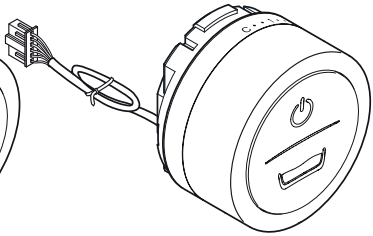

1874.271
Bath Fill Shower Interface

Remote ON/OFF Button

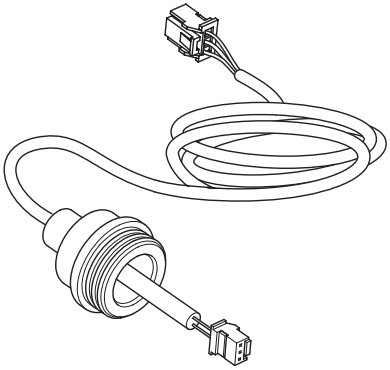

1874.278
Remote Lead

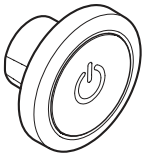

1874.275
ON/OFF Remote

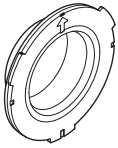

1874.276
ON/OFF Remote Backplate

Notes

Customer Service

Guarantee

Your product has the benefit of our manufacturer's guarantee which starts from date of purchase. This guarantee only applies in the United Kingdom and Republic of Ireland. To activate this guarantee, please return your completed registration card, visit our website or free phone 0800 5978551 within 30 days of purchase (UK only).

Within the guarantee period we will resolve defects in materials or workmanship, free of charge, by repairing or replacing parts or product as we may choose.

This guarantee is in addition to your statutory rights and is subject to the following conditions :

- The guarantee applies solely to the original installation under normal use and to the original purchaser only. The product must be installed and maintained in accordance with the instructions given in this guide.
- Servicing must only be undertaken by us or our appointed representative.
  Note! If a service visit is required the product must be fully installed and connected to services.
- Repair under this guarantee does not extend the original expiry date. The guarantee on any replacement parts or product ends at the original expiry date.
- For shower fittings or consumable items we reserve the right to supply replacement parts only.

The guarantee does not cover:

- Call out charges for non product faults (such as damage or performance issues arising from incorrect installation, improper use, inappropriate cleaning, lack of maintenance, build up of limescale, frost damage, chemical attack, corrosion, system debris or blocked filters) or where no fault has been found with the product.
- Water or electrical supply, waste and isolation issues.
- Compensation for loss of use of the product or consequential or indirect loss of any kind.
- Damage or defects caused if the product is repaired or modified by persons not authorised by us or our appointed representative.
- Routine maintenance or replacement parts to repaired or modified by persons not authorised by comply with the requirements of theTMV2 or repaired or modified by persons not authorised by TMV3 healthcare schemes
- Accidental or wilful damage.
- Products purchased ex-showroom display.

What to do if something goes wrong

If your product does not work correctly refer to this manual for fault diagnosis and check that it is installed and commissioned in accordance with our instructions. If this does not resolve the issue, contact us for help and advice.

Helpdesk Service
Contact our Customer Services Team for product advice, to purchase spare parts or accessories or to set up service visit. You can contact us via phone or e-mail - contact details below.
Please provide your model name, power rating (if applicable) and date of purchase.

Mira Showers Website (www.mirashowers.co.uk)
Visit our website to register your guarantee, download user guides, diagnose faults, purchase our full range of accessories and popular spares, or request a service visit.

Spares and Accessories
We hold the largest stocks of genuine Mira spares and accessories.Contact us for a price or visit our website to purchase items from our accessory range and popular spares. (Only available in the United Kingdom)

Service/Repairs
No one knows our products better than our nationwide team of Service Technicians. We can carry out service or repair work to your product both during and after the guarantee period. (Only available in the United Kingdom and Republic of Ireland) Ask about our fixed price service repairs.

To Contact Us: UK

0844 571 5000
Calls cost 7p per minute plus your phone company's access charge

Fax: 01242 282595

Email – Visit
www.mirashowers.co.uk/contactus

By Post: **Mira Customer Services Dept, Cromwell Road, Cheltenham, Gloucestershire GL52 5EP**

To Contact Us: Eire Only

01 531 9337

E-mail:
CustomerServiceEire@mirashowers.com

Mira is a registered trade mark of Kohler Mira Limited.

The company reserves the right to alter product specifications without notice.

© Kohler Mira Limited, March 2017