Technical and Specification Information

Greenstar CDi Classic Series
Greenstar CDi Compact Series
Greenstar Si Compact Series
Greenstar i Series

Best Buy Which? Gas Boilers September 2015

Greenstar combi gas-fired condensing wall mounted boiler range

NEW Greenstar Sense & System Filter

WORCESTER
Bosch Group

Worcester and you. Making a diff

As part of the Bosch Group, Worcester products are designed and manufactured to provide customers with the highest levels of quality and reliability which are synonymous with the Bosch name throughout the world.

As part of Europe's largest supplier of heating products, Worcester, Bosch Group has the UK-based resources and support capability to offer you the value-added solutions you deserve. Worcester employs a nationwide network of Service Engineers and technically trained Field Sales Managers supported by an experienced technical services team which is able to provide comprehensive support and advice from designing system layouts through to installation.

Worcester is dedicated to providing energy efficient gas- and oil-fired condensing boilers, as well as an extensive range of renewable technologies. All of our products have been developed and introduced with the aim of helping the UK to achieve the Government's efficiency targets.

BOSCH
Invented for life

The reception and main entrance
at our Worcester headquarters

ference.

"At Worcester we recognise the vital role you play in the specification and installation of energy efficient appliances in homes across the UK. We will continue to invest in our products, people, facilities and added value services to ensure you have all you require in order to deliver only the best solutions to your customers' requirements."

Carl Arntzen,
Managing Director,
Bosch Thermotechnology Ltd.

Contents **Page**

The Greenstar combi condensing boiler range	4 - 5
Key features of the range	6 - 7
Greenstar CDi Classic features and benefits	8 - 9
Inside story – Greenstar CDi Classic	10 - 11
Greenstar CDi Compact features and benefits	12 - 13
Inside story – Greenstar CDi Compact	14 - 15
Greenstar Si Compact features and benefits	16 - 17
Inside story – Greenstar Si Compact	18 - 19
Greenstar i features and benefits	20 - 21
Inside story – Greenstar i	22 - 23
Controls	24 - 25
Wave – smart heating control	26 - 27
ErP easy as ABC	28 - 29
Site preparations and guidance	30 - 33
Greenstar combi installation requirements	34 - 36
NEW Greenstar System Filter	37
Worcester Keyless Filling Link	38 - 39
Condensate pipework	40 - 41
The Worcester CondenseSure siphon	42 - 43
Flue Gas Heat Recovery Unit	44 - 45
Horizontal and vertical flue terminal positioning	46 - 47
Horizontal fluing options	48 - 51
Vertical fluing options	52 - 54
Plume management positioning and system options	55 - 58
Accessories	59 - 63
Training	64 - 66
After-sales	67

The Greenstar combi gas-fired wall

Greenstar Si Compact

Greenstar CDi Classic

Best Buy
Which?
Gas Boilers September 2015

The Greenstar combi series is part of a market-leading range of energy-saving gas-fired boilers. Renowned for their energy efficiency, reliability, ease of installation and servicing, more than 2 million Greenstar combi boilers have been installed in homes across the UK.

mounted condensing boiler range

Greenstar CDi Compact

Greenstar i

As part of our commitment to offer installers high quality products and innovative heating solutions, Worcester is dedicated to continuously improving its entire range of combi boilers.

In 2013, we launched the revolutionary Greenstar CDi Compact and Si Compact models, which includes the innovative WB7 heat exchanger to combine both compact dimensions with a high efficiency.

In 2014, the Greenstar CDi Classic was improved with a number of extra features.

In 2015, the UK's best selling boiler, the Greenstar i Junior, was replaced with the Greenstar i, an ErP compliant boiler with a host of new features including a larger condensate siphon to remove freezing† issues and an easy to use control panel with a scrolling text display and higher hot water flow rates.

†Provided 32mm pipework not exceeding 3 metres in length is used.

Key features of the range

Winner of Which? Best Buy awards in 2010, 2011, 2012, 2013, 2014 and 2015

For six consecutive years, in a survey of Which? members, the Worcester Greenstar gas-fired condensing boiler range has been presented with Best Buy awards†. In the latest survey, no other manufacturer scored higher for reliability.

Highly efficient, highly cost-effective

All Worcester Greenstar wall mounted condensing combi boilers have an ErP 'A' rating for both hot water and space heating which means they are over 90% efficient.

Pre-heat facility

All Greenstar combi models have an in-built 'keep hot' facility which will keep the primary water within the heat exchanger hot – approximately 2.5 litres volume. This will ensure that hot water is delivered almost instantly to the opened outlet.

ECO mode

With the ECO mode button activated, the 'keep hot' facility is de-energised and the hot water will be heated from cold. A slight delay should be expected before the hot water is at full temperature when in ECO mode. By selecting ECO mode, less gas will be used as energy is used only on demand.

ErP A+ rated system

An ErP rating of 'A+' on heating can be achieved by the Greenstar i, Si Compact and CDi Compact when installed with a Wave.

Low NOx options

Worcester's commitment to reduce emissions from gas-fired condensing boilers sees all Greenstar combi boilers achieve NOx values <40mg/kWh. This enables the appliances to achieve 3 credits under the Code for Sustainable Homes. The Greenstar i can be programmed to achieve a low NOx value. All other boilers are low NOx as standard.

5 year guarantee

All Worcester Greenstar combi boilers are offered with a full 5 year guarantee* on parts and labour as well as a 10 year guarantee* on the primary heat exchanger*. Registration can be by post, telephone, online or via the new app.

Register from your smart device

Guarantees can now be registered from a smart device using the new app which can scan the boiler's serial number to save you time entering it.

*Terms and conditions apply.

Best Buy Which? Gas Boilers September 2015

The Greenstar combi range at a glance

Boiler		29CDi Classic	34CDi Classic	38CDi Classic	42CDi Classic	28CDi Compact	32CDi Compact	36CDi Compact	25Si Compact	30Si Compact	25i	30i
Part No.	NG	7 738 100 248	7 738 100 250	7 738 100 252	7 738 100 246	7 733 600 054	7 733 600 055	7 733 600 056	7 733 600 050	7 733 600 052	7 733 600 012	7 733 600 005
	LPG	7 738 100 249	7 738 100 251	7 738 100 253	7 738 100 247	7 733 600 057	7 733 600 058	7 733 600 059	7 733 600 051	7 733 600 053	7 733 600 031	7 733 600 032
Output kW to DHW	Min	7.7kW	7.7kW	9.4kW	9.4kW	7.03kW	7.03kW	7.03kW	7.03kW	7.03kW	7.14kW	7.14kW
	Max	30.9kW	35kW	40kW	42kW	28kW	32kW	36kW	25kW	30kW	25kW	30kW
Flow rate at 35ºC ΔT (± 15%)		12.3l/min	14.3l/min	16.4l/min	17.2l/min	11.4l/min	13.1l/min	14.7l/min	10.2l/min	12.3l/min	10.2l/min	12.3l/min
Flow rate at 40ºC ΔT (± 15%)		11l/min	12l/min	14l/min	15l/min	10l/min	11.5l/min	12.9l/min	9l/min	10.8l/min	9l/min	10.8l/min
Output kW to central heating (CH)	Min	7.7kW	7.7kW	9.4kW	9.4kW	7.03kW	7.03kW	7.03kW	7.03kW	7.03kW	7.2kW	7.2kW
	Max	30kW	30kW	30kW	30kW	24kW	24kW	24kW	24kW	24kW	24kW	24kW
Maximum output kW to central heating (CH) with low NOx option		–	–	–	–	–	–	–	–	–	13kW	13kW
Modulating control		✓	✓	✓	✓	✓	✓	✓	✓	✓	✓	✓
Electronic ignition		✓	✓	✓	✓	✓	✓	✓	✓	✓	✓	✓
Integrated filling link		✓	✓	✓	✓	✓	✓	✓	(optional)	(optional)	(optional)	(optional)
Earth Bonding Strip		✓	✓	✓	✓	(optional)	(optional)	(optional)	(optional)	(optional)	(optional)	(optional)
Remote PRV		(optional)	(optional)	(optional)	(optional)	–	–	–	–	–	(optional)	(optional)
Condensing in DHW		✓	✓	✓	✓	✓	✓	✓	✓	✓	✓	✓
ErP 'A+' rating with weather compensation control		–	–	–	–	✓	✓	✓	✓	✓	✓	✓

The Greenstar condensing combi range – features and benefits at a glance

Energy-saving & environmental

- All models are compliant with the ErP Directive
- ErP 'A' rating for heating and hot water
- ErP 'A+' rating for heating when installed with a 4% load and weather compensation control such as the Wave
- Simple and intelligent control options are available to optimise boiler efficiency
- Low electrical consumption in standby mode
- Aluminium-silicon heat exchangers deliver high efficiency and reliability
- All wall hung Greenstar gas-fired combi boilers condense in DHW mode
- Modulating pump which uses less electricity than a fixed speed pump
- Anti-cycle control.

Time & labour-saving installation

- Wall frame allows space for pipes behind the boiler as standard
- Vertical pre-piping assembly available as an accessory
- Full range of Condensfit II™ flue options
- Multi-directional fluing means boiler can be sited in a wider variety of places
- The boiler comes pre-wired and with the ability to be pre-plumbed.

End user comfort and convenience

- Full 5 year guarantee on parts and labour as well as a 10 year guarantee on the primary heat exchanger*
- Boiler protection plans available for both new and out-of-guarantee Worcester Greenstar boilers
- Bosch renowned quality and reliability
- Built-in boiler frost protection
- Small dimensions – Greenstar CDi Compact, Si Compact and i models
- ECO mode for energy-saving fuel consumption.

Subject to terms and conditions.

Greenstar CDi Classic

Features and benefits

The top-of-the-range, award-winning Greenstar CDi Classic is a high performance boiler that is suitable for small, medium and large-sized properties with one or two bathrooms. It has set the benchmark within the industry for efficiency, reliability and ease of installation, while achieving a market-leading flow rate up to 17.2 l/min.

The Greenstar CDi Classic offers the opportunity to range-rate the central heating output to perfectly match the properties' requirements which reduces cycling and improves efficiency further.

With more than 2 million Greenstar combi boilers installed in the UK, the ever popular Worcester Greenstar CDi Classic, with its advanced features and future-proof technology, still sets the standard for premium quality, high-efficiency combi boilers.

The Greenstar CDi Classic also achieves 3 credit points within the Code for Sustainable Homes.

For more information on ErP, see pages 28-29.

Installation benefits

- Standard wall frame allows space for pipes behind the boiler now supplied with a paper template to aid positioning of holes
- Can be serviced entirely from the front with easy access to parts and components
- Split wall-mounting jig provided as standard for pre-plumbing of all 7 connections – gas, water, PRV & condensate connections before the boiler is on the wall
- Remote PRV can be positioned higher in the system for cellar installations
- Earth bonding strip fitted as standard which saves time and money when connecting and wiring
- Clear display on fascia for temperature and commissioning settings
- Short-circuit proof PCB design that removes the need for fuses in the low voltage circuits
- Full range of Condensfit II™ horizontal and vertical flue options with optional plume management kit available means boiler can be sited in a wide variety of places.

Environmental benefits

- ErP 'A' rated for both heating and hot water
- SEDBUK A rating of up to 89.4% (2009 rating)
- WB5 heat exchanger delivers high efficiency and reliability
- Low electrical consumption when in standby mode
- NOx emissions of 35mg/kWh – achieves 3 credits under the Code for Sustainable Homes
- All boilers and components are 100% recyclable, achieving Worcester's zero waste to landfill objective.

Features based on installer feedback

The Greenstar CDi Classic includes a large condensate siphon, which eliminates the risk of frozen condensate and means an external CondenseSure will not be required†. The Greenstar CDi Classic range includes a paper wall mounting template to aid installation.

The water in the appliance can be drained using the combined appliance and condensate drain. This removes the need to connect an external hose saving the installer time on servicing and maintenance.

WB5 heat exchanger

The Worcester WB5 heat exchanger has been designed to optimise clean burning combustion over an extra-large surface area. Each heat exchanger is factory-set and 100% tested so, as long as the gas inlet pressure is correct, commissioning is straightforward. The heat exchanger requires minimal servicing which means fewer spare parts during its lifetime. The heat exchanger can be cleaned in situ via an inspection hatch, again saving time during service.

WB5
Heat Exchanger

On the primary
heat exchanger*

End user benefits

- Heat exchanger delivers high efficiency and reliability
- Energy-saving anti-cycle and modulation control
- Fully modulating pump for reduced electricity consumption and quieter operation
- Condenses in CH and DHW mode, resulting in greater efficiency and fuel savings
- Low electrical consumption when in standby mode
- In-built Keyless Filling Link making system re-pressurisation easy
- Full 5 year guarantee on parts and labour*
- 10 year guarantee on Worcester primary heat exchanger*
- Boiler protection plans available
- Part of the Which? Best Buy range for gas-fired condensing boilers.

The Greenstar CDi Classic boiler is recommended by the Energy Saving Trust (EST). The Energy Saving Trust is a non-profit organisation that provides free and impartial advice on how to save energy.

Terms and conditions apply. †Provided 32mm pipework not exceeding 3 metres in length is used.

Inside story – Greenstar CDi Classic

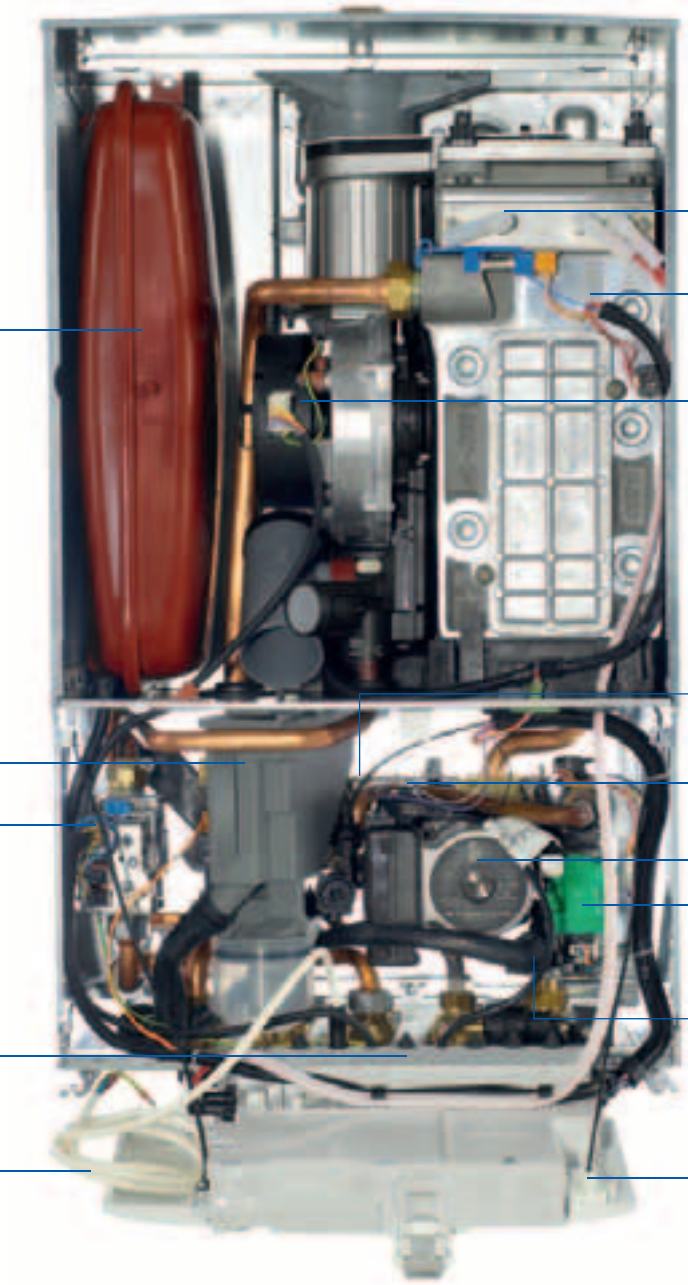

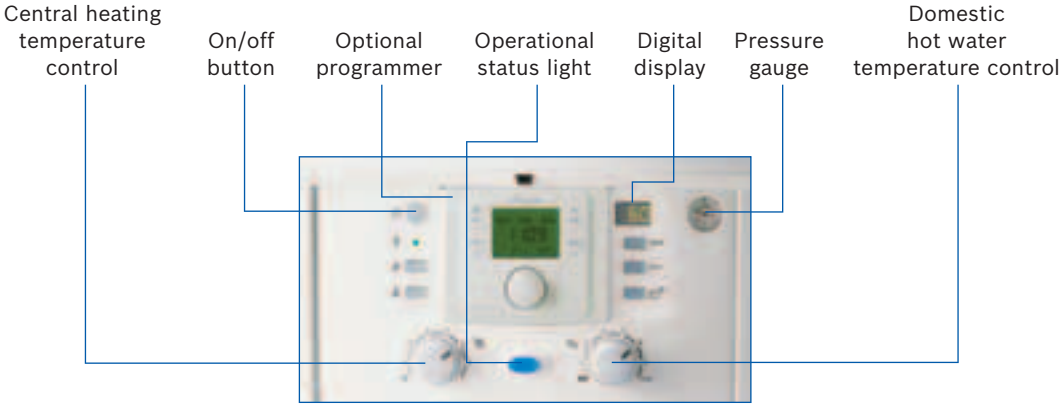

Greenstar CDi Classic fascia with optional Comfort I RF plug-in twin channel programmer fitted

Technical data

Boiler	Greenstar 29CDi Classic	Greenstar 34CDi Classic	Greenstar 38CDi Classic	Greenstar 42CDi Classic
Height	760mm (max)	760mm (max)	760mm (max)	760mm (max)
Width	440mm	440mm	440mm	440mm
Depth	360mm (max)	360mm (max)	360mm (max)	360mm (max)
Weight – lift	47.5kg	47.5kg	47.5kg	47.5kg
ErP Seasonal space heating energy efficiency class	A / 92%	A / 92%	A / 92%	A / 92%
ErP Water heating energy efficiency class (declared load profile XL)	A	A	A	A
SAP efficiency – natural gas	89.1%	89.1%	89.0%	89.4%
SAP comparative hot water efficiency	71.2	72.3	71.5	72.0
Heating flow / return connections (compression)	22mm	22mm	22mm	22mm
Hot / cold water connections (compression)	15mm	15mm	15mm	15mm
Pressure relief valve (compression)	15mm	15mm	15mm	15mm
Condensate connection (plastic pipe)	22mm	22mm	22mm	22mm
Gas connection (compression)	22mm	22mm	22mm	22mm
Primary water content	3.75 ltr	3.75 ltr	3.75 ltr	3.75 ltr
Minimum domestic inlet pressure for maximum DHW flow rate	1.4bar	1.5bar	1.7bar	1.9bar
Minimum domestic inlet pressure to operate the appliance	0.2bar	0.2bar	0.2bar	0.2bar
Maximum domestic inlet pressure	10bar	10bar	10bar	10bar
Minimum flow rate to operate the appliance	1.9 ltr/min	1.9 ltr/min	1.9 ltr/min	1.9 ltr/min
DHW flow rate @ 35ºCΔT†	12.3 ltr/min	14.3 ltr/min	16.4 ltr/min	17.2 ltr/min
DHW flow rate @ 40ºCΔT††	11 ltr/min	12 ltr/min	14 ltr/min	15 ltr/min
Output to central heating (natural gas)	7.7 - 30kW	7.7 - 30kW	9.4 - 30kW	9.4 - 30kW
Wall mounting jig and paper template	✓	✓	✓	✓
Keyless filling link	✓	✓	✓	✓
Plug-in timers	✓ (optional)	✓ (optional)	✓ (optional)	✓ (optional)
Intelligent controls	✓ (optional)	✓ (optional)	✓ (optional)	✓ (optional)
Condensing in DHW mode	✓	✓	✓	✓
Maximum vertical flue (100mm dia.) inc. terminal	9,400mm	8,000mm	7,500mm	7,500mm
Maximum vertical flue (125mm dia.) inc. terminal	18,500mm	16,000mm	16,000mm	16,000mm
Maximum horizontal flue (100mm dia.)	7,900mm	7,000mm	6,000mm	6,000mm
Maximum horizontal flue (125mm dia.)	18,500mm	16,000mm	12,500mm	12,000mm
NOx classification – natural gas	33.3mg/kWh	33.3mg/kWh	21.8mg/kWh	21.8mg/kWh
NOx class	5	5	5	5
Ingress protection (IP)	X4D	X4D	X4D	X4D

†Values for industry comparisons. ††Designed operational flow rate.

Greenstar CDi Compact

Features and benefits

The revolutionary Worcester Greenstar CDi Compact is part of our top-of-the-range CDi boiler series and is part of our next generation of wall-mounted combi boilers. Suitable for small, medium and large-sized properties, the Greenstar CDi Compact, with hot water outputs of up to 36kW, is best suited to properties that demand high outputs from an appliance that can fit within a standard kitchen cupboard.

Available with **DHW flow rates of 11.4, 13.1 and 14.7 l/min**, the CDi Compact is the smallest condensing combi boiler Worcester has produced and comes with a host of design features for ease of installation, use and servicing.

Its ease of installation and cupboard size dimensions are thanks to the ultra-compact WB7 heat exchanger, easy-access hydraulics and colour-coded wiring connectors. The boiler comes supplied with an innovative wall-mounting jig that allows installers to easily pre-plumb the condensate, CH flow, DHW outlet, gas, DCW inlet, PRV installer connection and CH return without the boiler being on the wall.

The Greenstar CDi Compact along with its low NOx emissions, obtains 3 credit points within the Code for Sustainable Homes standard.

ErP RATING A A

A+ with the WAVE

For more information on ErP, see pages 28-29.

Installation benefits

- Robust, metal wall-mounting jig for safe, secure, hassle-free fixing
- Split jig design for optimum lift weight. The expansion vessel has a simple drop lock mechanism that connects directly onto the hydraulic unit
- LCD boiler display for operation status, commissioning features and diagnostics data
- Double-seal siphon located at the front of the boiler for easy maintenance
- Electrical connections accessible from the front of the boiler
- Maximum flue lengths of 6m 60/100mm flue and 15m 80/125mm flue
- Pre-set combustion settings for fast commissioning and with Benchmark Commissioning Checklist data available on the boiler display
- Full range of Condensfit II™ horizontal and vertical flue options with optional plume management kit available.

Environmental benefits

- ErP ‘A’ rated for both heating and hot water
- ErP ‘A+’ rating for heating when installed with a load and weather compensation control such as the Wave
- SEDBUK A rating of 89.8% (2009 rating)
- Ability to fix a maximum heating temperature – meaning no matter how much you turn the dial, the temperature will not exceed that maximum setting
- Precision engineered WB7 heat exchanger reduces raw material usage during manufacturing
- Low electrical standby consumption
- NOx emissions of 35mg/kWh – achieves 3 credits under the Code for Sustainable Homes
- Hot water pre-heat accessory (Part Number 7 716 192 735) allows it to be used in conjunction with other heat sources, such as Greenskies solar thermal
- All boilers and components are 100% recyclable, achieving Worcester’s zero waste to landfill objective.

WB7 heat exchanger

At the heart of the Greenstar CDi Compact is the ground-breaking WB7 heat exchanger, which uses advanced friction stir welding† to create more passageways than traditional heat exchangers. These channels provide more efficient circulation, resulting in a more effective heat transfer and quieter operation.

Designed, tested and manufactured within Bosch Thermotechnology Ltd., the WB7 heat exchanger delivers high output despite its compact size.

Friction stir welding

Friction stir welding is a solid state machining process where the metal is softened rather than melted, giving improved quality, reliability and performance.

Widely used for demanding applications in the aviation, marine and automotive sectors, it has enabled Worcester to manufacture a more compact heat exchanger, reducing the overall size of the boiler while delivering a high power ratio of up to maximum 36kW.

WB7
Heat Exchanger

On the primary heat exchanger*

The Greenstar CDi Compact boiler is recommended by the Energy Saving Trust (EST). The Energy Saving Trust is a non-profit organisation that provides free and impartial advice on how to save energy.

End user benefits

- Simple and intelligent control options available, optimising boiler efficiency and fuel consumption
- Condenses in CH and DHW mode, resulting in greater efficiency and fuel savings
- Pre-heat and ECO modes to suit hot water delivery needs
- Fully modulating pump for reduced electricity consumption and quieter operation
- Built-in frost protection of the boiler and the surrounding pipes
- Includes internal keyed filling link
- Optional Worcester Keyless Filling Link available as an upgrade, making system re-pressurisation easy
- Full 5 year guarantee on parts and labour*
- 10 year guarantee on Worcester primary heat exchanger*
- Boiler protection plans available
- Part of the Which? Best Buy range for gas-fired condensing boilers.

*†The friction stir welding process is used under license from The Welding Institute. *Terms and conditions apply.*

Inside story – Greenstar CDi Compact

Expansion vessel (hidden)

Pre-mix fan

Automatic air vent

Down firing low NOx burner

Aluminium/silicon WB7 primary heat exchanger

Gas valve

Secondary DHW plate heat exchanger

ErP compliant modulating pump

Diverter valve (hidden)

Condensate siphon

Pressure relief valve

PCB board

Mains cable pre-wired to control board

Operational status light

Central heating temperature control

Digital display

Optional programmer

Domestic hot water temperature control

Pressure gauge

Greenstar CDi Compact fascia with optional Comfort I RF plug-in twin channel programmer fitted

Technical data

Boiler	Greenstar 28CDi Compact	Greenstar 32CDi Compact	Greenstar 36CDi Compact
Height	680mm*	680mm*	680mm*
Width	390mm	390mm	390mm
Depth	280mm	280mm	280mm
Weight – lift	32.9kg	32.9kg	32.9kg
ErP Seasonal space heating energy efficiency class	A / 94%	A / 94%	A / 94%
ErP Water heating energy efficiency class (declared load profile XL)	A	A	A
SAP efficiency – natural gas	89.8%	89.8%	89.8%
SAP comparative hot water efficiency	74.9	75.0	74.7
Heating flow / return connections (compression)	22mm	22mm	22mm
Hot / cold water connections (compression)	15mm	15mm	15mm
Pressure relief valve (compression)	15mm	15mm	15mm
Condensate connection (compression)	22mm	22mm	22mm
Gas connection (compression)	22mm	22mm	22mm
Primary water content	2.2 ltr	2.2 ltr	2.2 ltr
Minimum domestic inlet pressure for maximum DHW flow rate	1.6bar	1.6bar	1.6bar
Minimum domestic inlet pressure to operate the appliance	0.2bar	0.2bar	0.2bar
Maximum domestic inlet pressure	10.0bar	10.0bar	10.0bar
DHW flow rate @ 35ºCΔT†	11.4 ltr/min	13.1 ltr/min	14.7 ltr/min
DHW flow rate @ 40ºCΔT††	10.0 ltr/min	11.5 ltr/min	12.9 ltr/min
Output to central heating	7.03 - 24kW	7.03 - 24kW	7.03 - 24kW
Wall mounting jig	✓	✓	✓
Filling link	✓	✓	✓
Plug-in timers	✓ (optional)	✓ (optional)	✓ (optional)
Intelligent controls	✓ (optional)	✓ (optional)	✓ (optional)
Condensing in DHW mode	✓	✓	✓
Maximum vertical flue (100mm dia.) inc. terminal	6,000mm	6,000mm	6,000mm
Maximum vertical flue (125mm dia.) inc. terminal	15,000mm	15,000mm	15,000mm
Maximum horizontal flue (100mm dia.)	6,000mm	6,000mm	6,000mm
Maximum horizontal flue (125mm dia.)	15,000mm	15,000mm	15,000mm
NOx classification – natural gas	35mg/kWh	35mg/kWh	35mg/kWh
NOx class	5	5	5
Ingress protection (IP)	X4D	X4D	X4D

*690mm to top of casing curve. †Values for industry comparisons. ††Designed operational flow rate

Greenstar Si Compact

Features and benefits

The Greenstar Si Compact has a host of performance-enhancing features, including the revolutionary WB7 heat exchanger which enables the appliances to deliver DHW flow rates of 10.2 and 12.3 l/min despite their compact size.

Similarly to the CDi Compact, particular care has been taken with the design of the hydraulic unit. Key components are positioned to provide easy access, whilst the Heatronic 4i control box makes commissioning simpler. This menu-driven unit features an LCD display which shows boiler status symbols and system and commissioning parameters as well as giving access to service and maintenance codes and diagnostics.

The compact design makes the Greenstar Si Compact ideal for a variety of locations, including kitchens, utility rooms, bathrooms, airing cupboards, lofts or garages.

The Greenstar Si Compact achieves 3 credit points within the Code for Sustainable Homes.

For more information on ErP, see pages 28-29.

Installation benefits

- Can be installed in a standard kitchen cupboard or compartment without the need for ventilation
- Robust, metal wall mounting jig for safe, secure, hassle-free fixing
- Split jig design for optimum lift weight (32.9kg). The expansion vessel has a simple drop lock mechanism that connects directly onto the hydraulic unit
- LCD boiler display for operation status, commissioning features and diagnostics
- Double seal siphon located at the front of the boiler for easy maintenance
- Electrical connections accessible from the front of the boiler
- Maximum flue lengths of 6m 60/100mm flue and 15m 80/125mm flue
- Pre-set combustion settings for fast commissioning and with Benchmark Commissioning Checklist data available on the boiler display
- Full range of Condensfit II™ horizontal and vertical flue options with optional plume management kit available.

Environmental benefits

- ErP 'A' rated for both heating and hot water
- ErP 'A+' rating for heating when installed with a load and weather compensation control such as the Wave
- SEDBUK A rating of 89.8% (2009 value)
- Precision engineered heat exchanger delivers high efficiency and reliability
- Anti-cycle and modulation control
- Simple and intelligent control options available
- Low electrical consumption when in standby mode
- Lower fan speed at higher output
- NOx emissions of 35mg/kWh – achieves 3 credits under the Code for Sustainable Homes
- All boilers and components are 100% recyclable, achieving Worcester's zero waste to landfill objective.

WB7 heat exchanger

Greenstar Si Compact boilers use the same ground-breaking WB7 heat exchanger as CDi Compact appliances.

Although compact in size, the WB7 heat exchanger offers outstanding levels of performance and is designed and built to provide long-term reliability.

Innovation at its best

The WB7 heat exchanger is an industry first for Worcester, Bosch Group. State-of-the-art friction stir welding† technology improves reliability, as the welding method eliminates the risk of potential weak points and stress fractures occurring.

WB7
Heat Exchanger

On the primary heat exchanger*

End user benefits

- Highly reliable and efficient heat exchanger
- Condenses in CH and DHW mode, resulting in greater efficiency and fuel savings
- Energy-saving anti-cycle and modulation control
- Simple and intelligent control options available, optimising boiler efficiency and fuel consumption
- Comfort and ECO modes to suit hot water delivery needs
- Maximum central heating output 24kW
- Optional Worcester Keyless Filling Link available, making system re-pressurisation easy
- Full 5 year guarantee on parts and labour*
- 10 year guarantee on Worcester primary heat exchanger*
- Boiler protection plans available
- Part of the Which? Best Buy range for gas-fired condensing boilers.

energy saving trust recommended

The Greenstar Si Compact boilers are recommended by the Energy Saving Trust (EST). The Energy Saving Trust is a non-profit organisation that provides free and impartial advice on how to save energy.

Best Buy Which? Gas Boilers September 2015

*†The friction stir welding process is used under license from The Welding Institute. *Terms and conditions apply.*

Inside story – Greenstar Si Compact

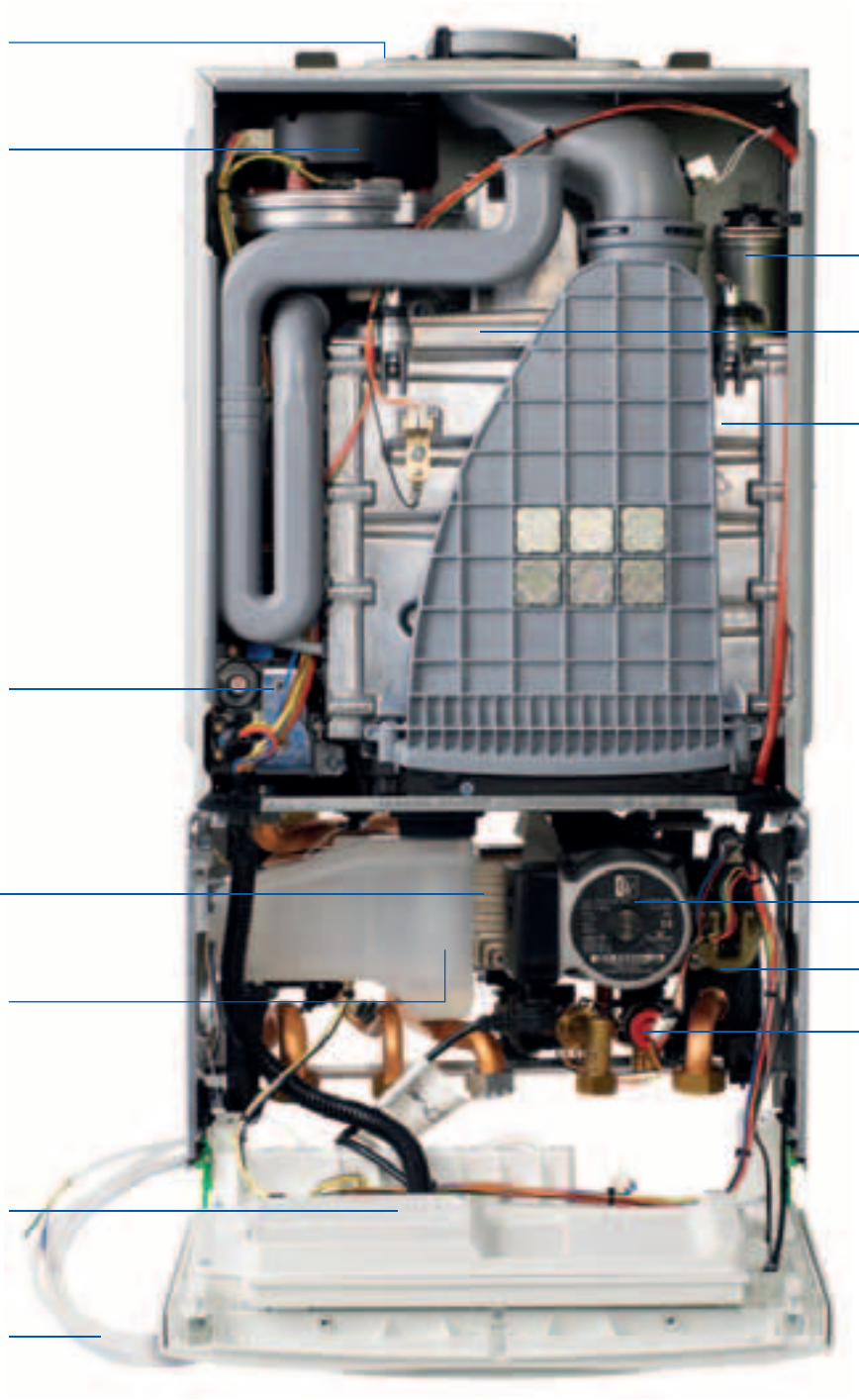

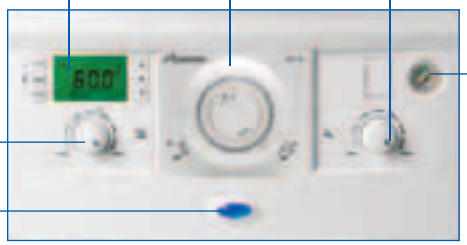

Greenstar Si Compact fascia with optional MT10 mechanical timer fitted

Technical data

Boiler	Greenstar 25Si Compact	Greenstar 30Si Compact
Height	690mm (max)*	690mm (max)*
Width	390mm	390mm
Depth	280mm (max)	280mm (max)
Weight – lift	32.9kg	32.9kg
ErP Seasonal space heating energy efficiency class	A / 94%	A / 94%
ErP Water heating energy efficiency class (declared load profile XL)	A	A
SAP efficiency – natural gas	89.8%	89.8%
SAP comparative hot water efficiency	74.7	74.2
Heating flow / return connections (compression)	22mm	22mm
Hot / cold water connections (compression)	15mm	15mm
Pressure relief valve (compression)	15mm	15mm
Condensate connection (plastic pipe)	22mm	22mm
Gas connection (compression)	22mm	22mm
Primary water content	2.2 ltr	2.2 ltr
Minimum domestic inlet pressure for maximum DHW flow rate	1.6bar	1.6bar
Minimum domestic inlet pressure to operate the appliance	0.2bar	0.2bar
Maximum domestic inlet pressure	10bar	10bar
Minimum flow rate to operate the appliance	2 ltr/min	2 ltr/min
DHW flow rate @ 35°CΔT†	10.2 ltr/min	12.3 ltr/min
DHW flow rate @ 40°CΔT††	8.9 ltr/min	10.7 ltr/min
Output to central heating (natural gas)	7.03 - 24kW	7.03 - 24kW
Wall mounting jig	✓	✓
Filling link	✓ (optional)	✓ (optional)
Plug-in timers	✓ (optional)	✓ (optional)
Intelligent controls	✓ (optional)	✓ (optional)
Condensing in DHW mode	✓	✓
Maximum vertical flue (100mm dia.) inc. terminal	6,000mm	6,000mm
Maximum vertical flue (125mm dia.) inc. terminal	15,000mm	15,000mm
Maximum horizontal flue (100mm dia.)	6,000mm	6,000mm
Maximum horizontal flue (125mm dia.)	15,000mm	15,000mm
NOx classification – natural gas	35mg/kWh	35mg/kWh
NOx class	5	5
Ingress protection (IP)	X4D	X4D

**Measured to the top or front of the curve height. †Values for industry comparisons. ††Designed operational flow rate.*

Greenstar i

Features and benefits

The Greenstar i combi boiler builds on the popular features of the market-leading Greenstar i Junior, while introducing a host of new features. These improvements include enhanced performance, an intuitive control panel and design improvements that make installation and maintenance easier.

Available with **DHW flow rates of 10.2 and 12.3 l/min**, higher than the i Junior, to deliver excellent hot water performance in apartments and small to medium-sized properties with one bathroom.

The new Heatronic i control panel features familiar 'up and down' buttons, similar to the simple adjustment of a TV remote control, for changing flow temperature and DHW temperature. The ability to easily alter flow temperature enables users to either accelerate heat-up time or use lower flow temperatures to increase energy-saving condensing.

The Greenstar i is supplied with a pre-assembled wall frame, as well as a new angled mounting hook that makes installation over countertops even easier. The mounting points are the same as for the Greenstar i Junior so that replacement can be straightforward.

The wall-mounting jig allows installers to quickly pre-plumb the condensate, CH flow, DHW outlet, gas, DCW inlet, PRV installer connection and CH return without the boiler being on the wall.

For more information on ErP, see pages 28-29.

Installation benefits

- Lift weight of just 31.7kg
- Simple switch – same dimensions as i Junior
- Expansion tank pre-installed in boiler
- Familiar, reliable components
- WB3 heat cell and hydraulic group same as i Junior
- Smart design increases internal space for ease of access
- Front casing can be removed easily
- All items serviceable from the front
- Benchmark menu for easier completion of Benchmark logbook
- Text descriptions of error codes
- Cross-pipe detection
- Large condense siphon which removes the need for CondenseSure accessory.

Environmental benefits

- ErP 'A' rated for both heating and hot water
- ErP 'A+' rating for heating when installed with a load and weather compensation control such as the Wave
- SEDBUK A rating of 89.6% (2009 value)
- Increased comparative DHW efficiency
- Fully compatible with Worcester plug-in controls
- Low-energy modulating pump
- Simple weather compensation sensor accessory which increases system efficiency by 2%, ErP Class II control
- Ability to programme for low NOx
- Anti-cycle and modulation control
- Low electrical consumption when in stand by mode
- All boilers and components are 100% recyclable, achieving Worcester's zero waste to landfill objective.

Information at your fingertips

The digital display includes a 'quick info' button to provide information on the boiler's status, DHW and flow temperature, clear text descriptions for quick boiler diagnostic and flow detection.

Detailed scrolling digital display

WB3 heat exchanger

The Greenstar i uses the proven WB3 aluminium/silicon heat exchanger.

As part of our Total Quality Initiative programme, Worcester tests its boilers and heat exchangers using its own recipe to replicate contaminated heating system water.

This contains iron dust, quartz sand, hemp fibre and other contaminates found in such system water samples. This testing procedure ensures that all our heat exchangers are proven to be robust and efficient over the boiler's lifetime.

WB3
Heat Exchanger

On the primary heat exchanger*

End user benefits

- Simple and intelligent control options available, optimising boiler efficiency and fuel consumption
- Excellent energy efficiency
- Improved hot water performance from previous i Junior
- Larger condensate siphon to prevent risk of freezing condensate†
- Improved output and flow rates for increased water comfort
- 'Quick set' optimised heating and hot water temperatures
- Optional Worcester Keyless Filling Link available, making system re-pressurisation easy
- Eco/Pre-heat toggle mode
- Full 5 year guarantee on parts and labour*
- 10 year guarantee on Worcester primary heat exchanger*
- Boiler protection plans available
- Part of the Which? Best Buy range for gas-fired condensing boilers.

Best Buy
Which?
Gas Boilers September 2015

**Terms and conditions apply. †Provided 32mm pipework not exceeding 3 metres in length is used.*

Inside story – Greenstar i

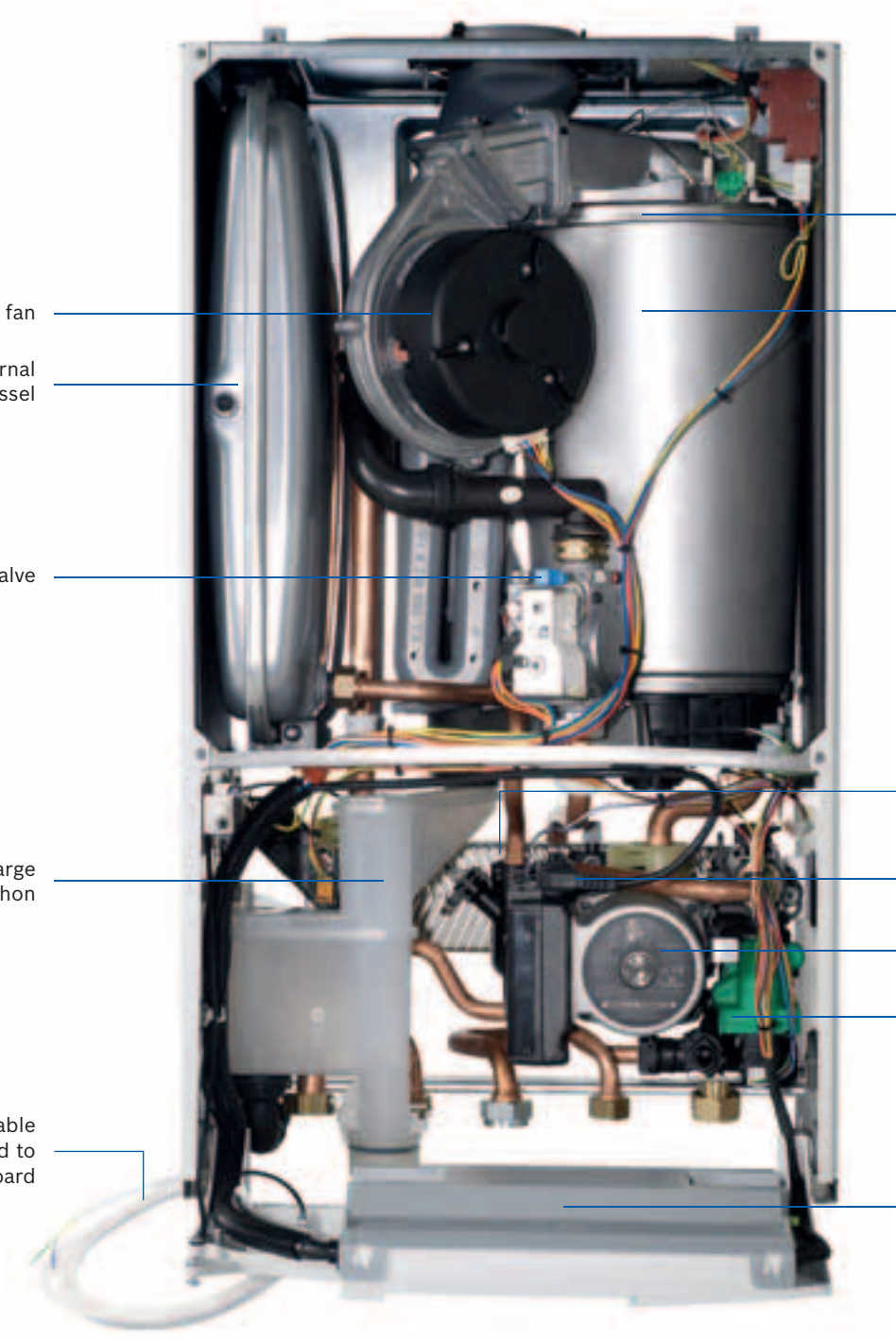

Greenstar i fascia with Comfort plug-in twin channel programmer fitted

Technical data

Boiler	Greenstar 25i	Greenstar 30i
Height	710mm (max)*	710mm (max)*
Width	400mm	400mm
Depth	330mm (max)*	330mm (max)*
Weight – lift	31.7kg	31.7kg
ErP Seasonal space heating energy efficiency class	A / 94%	A / 94%
ErP Water heating energy efficiency class (declared load profile XL)	A	A
SAP efficiency – natural gas	89.6%	89.6%
SAP comparative hot water efficiency	73.2	72.1
Heating flow / return connections (compression)	22mm	22mm
Hot / cold water connections (compression)	15mm	15mm
Pressure relief valve (compression)	15mm	15mm
Condensate connection (plastic pipe)	22mm	22mm
Gas connection (compression)	22mm	22mm
Primary water content	3.9 ltr	3.9 ltr
Minimum domestic inlet pressure for maximum DHW flow rate	1.3bar	2.0bar
Minimum domestic inlet pressure to operate the appliance	0.2bar	0.2bar
Maximum domestic inlet pressure	10bar	10bar
Minimum flow rate to activate DHW demand	2.9 ltr/min	2.9 ltr/min
DHW flow rate @ 35ºCΔT†	10.2 ltr/min	12.3 ltr/min
DHW flow rate @ 40ºCΔT††	9 ltr/min	10.8 ltr/min
Output to central heating (natural gas)	7.2 - 24kW**	7.2 - 24kW**
Wall mounting jig	✓	✓
Filling link	✓ (optional)	✓ (optional)
Plug-in timers	✓ (optional)	✓ (optional)
Intelligent controls	✓ (optional)	✓ (optional)
Maximum vertical flue (100mm dia.) inc. terminal	6,400mm	6,400mm
Maximum vertical flue (125mm dia.) inc. terminal	15,000mm	15,000mm
Maximum horizontal flue (100mm dia.)	4,600mm	4,600mm
Maximum horizontal flue (125mm dia.)	13,000mm	13,000mm
NOx classification – natural gas	49mg/kWh	49mg/kWh
NOx classification with low NOx code plug – natural gas	39mg/kWh	39mg/kWh
NOx class	5	5
Ingress protection (IP)	X4D	X4D

**Measured to the top or front of the curve height. **13kW with low NOx code plug fitted.*
†Values for industry comparisons. ††Designed operational flow rate.

Controls

5 year guarantee

When purchased and installed at the same time, the guarantee period for a Worcester control will match that of a Greenstar gas-fired boiler*.

NEW Greenstar Sense controls

Sense I – Intelligent room thermostat – Part no. 7 738 110 054

- Load compensation feature for increased efficiency
- Boiler output automatically adjusted to precisely meet the heat demand of the property at maximum efficiency
- Maximises the condensing boiler's operation
- Ideal when replacing an existing, less efficient wired room thermostat.

Sense II – Weather compensation controller – Part no. 7 738 111 064

- Intelligently interacts with the boiler to provide weather compensation via a wired outdoor sensor
- Solar thermal optimisation in conjunction with MS100 solar module
- Displays the amount of energy recovered from a solar system
- Service reminder function
- Enables an A+ ErP system efficiency to be achieved when installed with any Greenstar i, Si or CDi Compact boiler.

NEW Greenstar Comfort controls

Comfort plug-in twin channel programmer – Part no. 7 733 600 003

- Simple menu navigation
- 7-day time control for heating and hot water
- Heating programme visualisation bar.

Comfort I RF wireless room thermostat and plug-in twin channel programmer – Part no. 7 733 600 001

- All the features of Comfort **PLUS**...
- Enhanced load compensation for increased efficiency
- No wiring required
- Extremely reliable RF signal.

Comfort II RF wireless programmable room thermostat and plug-in RF receiver – Part no. 7 733 600 002

- All the features of Comfort and Comfort I **PLUS**...
- 6 adjustable heating temperatures per day
- Set programme at the room thermostat
- Remote access to boiler diagnostic codes.

**Terms and conditions apply. ^When installed as a room thermostat.*

Mechanical timers

MT10 mechanical timer (for use with all models) – Part no. 7 716 192 036

- The simplest Worcester device
- Analogue clock for setting on and off times for heating.

MT10RF mechanical timer (for use with all models) – Part no. 7 716 192 037

- Simple installation
- Analogue display has comfort and economy time and temperature periods
- No need for separate room thermostat
- No wiring.

ErP EFFICIENCY +1%

Controls at a glance

Control option	TYPE				MOUNT		TIME CONTROL					TEMPERATURE CONTROL				CONNECTION TYPE			EFFICIENCY		MODEL			
	Mechanical	Digital	Intelligent	Internet	Fascia mounted	Wall mounted	Central heating	Hot water	24 hour	7 day	Auto switch – BST/GMT	Room thermostat	Programmable room thermostat	Optimum start	Boiler flow temp compensation	Plug-in	Radio frequency	Hard wired	ErP Class	Efficiency benefit	CDi Classic	CDi Compact	Si Compact	i
MT10	✓				✓		✓		✓							✓			–	–	✓	✓	✓	✓
MT10RF	✓					✓	✓		✓				✓				✓		I	1%	✓	✓	✓	✓
Comfort		✓			✓		✓	✓		✓	✓					✓			–	–	✓[1]	✓	✓	✓
Comfort I RF			✓		✓	✓	✓	✓		✓	✓	✓			✓		✓		V	3%	✓[1]	✓	✓	✓
Comfort II RF			✓			✓	✓	✓		✓	✓		✓		✓		✓		V	3%	✓[1]	✓	✓	✓
Sense I†			✓			✓						✓			✓			✓	V	3%	✓[1]	✓	✓	✓
Sense II			✓		✓	✓	✓	✓		✓	✓		✓	✓	✓	✓		✓	VI^	4%^	✓[1]	✓	✓	✓
Wave			✓	✓		✓	✓	✓		✓	✓		✓	✓	✓			✓	VI	4%	✓[1]	✓	✓	✓

[1] Manufactured after 16th January 2007 with software version CF12.10 onwards. †Must be used with an external proprietary 230V timer or MT10.
^When installed as a room thermostat.

Worcester Wave – smart control for heating and hot water

The Wave is the first of a new generation of Worcester controls.

The Wave is a smart, internet-connected programmable control for central heating and hot water which can be operated using a smart device.

The Wave's innovative programming enables it to have an 'intelligent conversation' with the boiler and take advantage of advanced control features such as weather and load compensation.

ErP EFFICIENCY +4%*

Enhanced energy efficiency

In the ErP Directive, smart controls like the Wave is a Class VI control, adding 4%* to the overall system efficiency for heating, resulting in lower fuel bills. This increases the ErP rating to 'A+' for the Greenstar i, Si Compact and CDi Compact on heating.

The Wave's energy efficiency features include:

- Charts of heating and hot water usage so the homeowner can easily identify where potential savings could be made.
- When the room temperature is turned down a leaf symbol will appear to indicate additional savings are being made.
- Load and weather compensation via the Internet so no outdoor sensor is required. This allows the boiler to modulate its performance to meet the needs of the household with optimum efficiency.

Adapting to the homeowner's needs

Each Wave unit is supplied with a pre-set programme that can then be easily modified to suit the user's requirements.

The Wave's advanced user features include:

- 'Pairing' with up to eight devices, automatically sensing when people are at home.
- Sensing to an individual device can be turned off if required.
- The Wave will remember preferred programme settings to make these easily available and features a 'holiday programme', requiring just a start and finish date.
- Unlike most other smart heating controls, the Wave can also programme the hot water settings, providing additional energy savings and comfort.
- For security and peace of mind, all of the Wave's data is owned by the user, ensuring no information is shared with other parties.

Wave compatible devices:*

Apple® devices running iOS 5.1 and higher
Android™ devices running 2.2, 2.3 or 4.0 and higher

Available on the App Store

Google play

***Correct at time of printing. *Factory default setting of the Wave is as a Class V control giving a 3% system efficiency benefit. When the weather compensation feature is enabled it increases to 4% and becomes a Class VI control.*

Quick to install

The Wave is quick and easy to install:

- Only requires a 2-core wire connection between the control and the boiler.
- All other connections are via the Wi-Fi network.
- The Wave does not need an external wired sensor unlike standard weather compensation controls.
- The Wave uses online data which significantly reduces installation time and cost to the end user.

As with all room heating controls the Wave should be sited where it can monitor the overall temperature of the property.

Compatibility with Worcester Greenstar boilers

Ideal for homes and small businesses, the Wave is compatible with all current Worcester Greenstar gas-fired combination and system* boilers. It can also be retrofitted for use with previous Worcester EMS-bus appliances.
All you need is:

- Worcester Wave control
- Worcester compatible boiler^
- Wi-Fi enabled broadband router – 802.11 b/g
- Wave app on a compatible Apple® or Android™ device.

Part number	Description
7 716 192 072	Wave

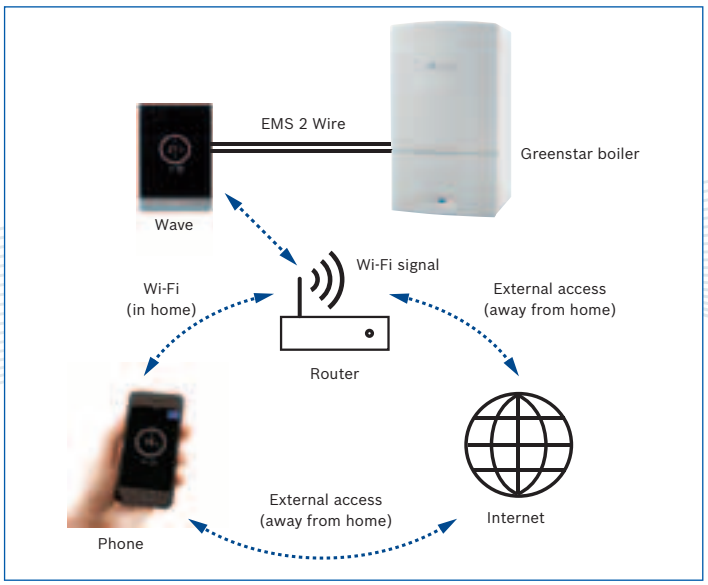

Simple to use, providing an easy handover

The Wave's intuitive and modern design ensures it is very simple to operate using either its in-built touchscreen or via the Wave app.

- Users simply download the Wave app to their compatible device to take control of their heating system from anywhere in the world where an internet connection is available.
- There are no subscription fees or chargeable app add-ons, therefore updates to the app software are completely free of charge.
- An installation and operating manual is provided with each control and there are a number of helpful videos to provide further detail on specific functions.
- Should the Wave temporarily lose the internet connection, it will continue to operate as an intelligent heating and hot water control simply by using the last saved programme settings.

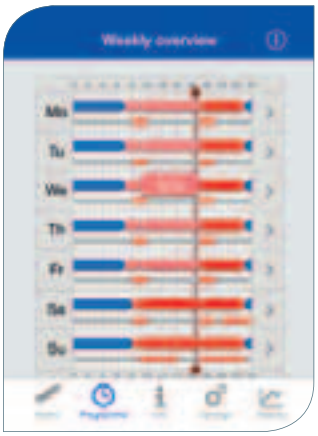

When installed with an optional Worcester Diverter Valve. ^Correct at time of printing. For the latest list of compatible boilers see the Worcester website.

ErP easy as ABC

What is ErP?

The ErP Directive, which is a new regulation set by the European Union, is designed to drive improvements in the efficiency and performance of heating and hot water products. Its purpose is to ensure that end users are aware of the level of energy efficiency inherent within their appliances. As such, the Directive will help improve the overall efficiency of the housing stock, while enabling homeowners to reduce their energy bills. The ErP regulations cover boilers, combination boilers, heat pumps and other heating appliances up to 400kW.

What is Energy Labelling?

The Energy Labelling involves a label which we are familiar with today on washing machines and televisions at the point of sale. The Energy Labelling regulations introduce Europe-wide energy labelling requirements for boilers, combination boilers, water heaters and other heating products up to 70kW and hot water cylinders under 500 litres.

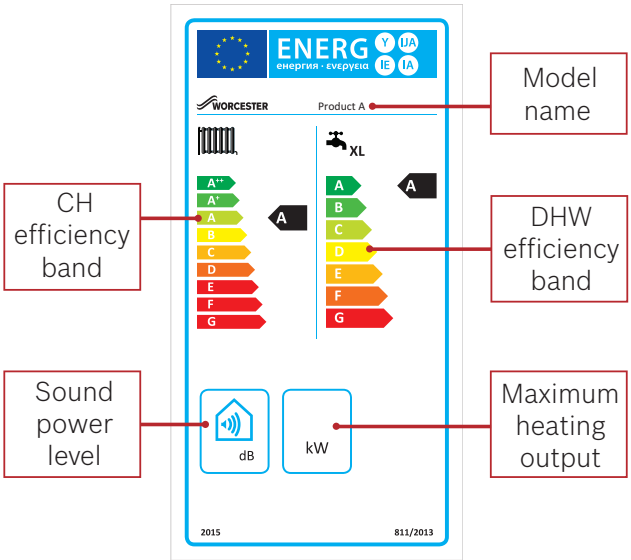

How will the labelling scheme work?

The new Energy Labelling Directive will introduce new efficiency classes from A++ to G alongside the existing SEDBUK rating for boilers in the domestic and light commercial sectors.

Most condensing boilers will fall within the A band, which requires them to achieve more than 90% seasonal efficiency, while renewable technologies such as heat pumps will likely be in the A+ or A++ bands (depending on flow temperature).

What about systems that contain different products?

In these circumstances, there is a responsibility to provide a package label when combining a heating appliance with a temperature control and/or solar device, cylinder or a supplementary heating appliance (for example, a two-boiler cascade with a combined total output of under 70kW).

The person who puts that package together will need to produce a package document known as a fiche (data table) and label that provides the combined energy efficiency rating rather than ratings of each individual component.

For example, this could be the merchant's responsibility if they supply a complete package under one part number or the installer if the items are bought individually under separate part numbers.

In either circumstance, Worcester will provide an online tool that makes calculating the overall package efficiency of a Worcester system effortless.

What about controls?

The ErP Directive covers all products that consume energy, such as boilers, heat pumps, solar thermal etc. It also includes controls, which are defined using 'classes'. These run from Class I (a simple on/off room stat) through to Class VIII (multi-sensor room control for use with modulating heating appliances).

Each control class equates to a certain percentage uplift in system efficiency e.g. a class VI weather compensating control and room thermostat will add 4% efficiency to the heating system.

This means that a Greenstar i, Si Compact or CDi Compact, which have a standard heating efficiency of 94%, will increase to 98% with the addition of the Wave, making an ErP 'A+' class system. Details of the controls class for each Worcester control can be found on pages 24-25.

A+ with the WAVE

ErP easy as ABC with Worcester

The Energy Labelling obligation under the Energy Related Products (ErP) Directive came into force on the 26th September 2015. Worcester has a number of measures in place to support you including:

- An **online label generator** which creates product and heating system labels
- ErP will be covered in all **Worcester training courses**
- **ErP experts** – our technical and customer support teams can answer all your questions.

ErP Technical Support: **0330 123 3641**
Email: **ErP-advice@uk.bosch.com**

Site preparations and guidance

All combi boilers require less installation time than a conventional boiler, for these reasons:

- Plug-in filling link provided with the Greenstar CDi Classic and CDi Compact (also available as an optional extra on both the Greenstar Si Compact and Greenstar i)
- Optional plug-in timers.

Siting of appliance

The appliances are only to be installed internally within a property, at a suitable location onto a fixed, rigid surface, that is at least the same size as the appliance and is capable of supporting its weight.

Mounting on a combustible surface

All Greenstar wall-mounted boilers can be sited on a combustible surface without the need for surface protection. EN482, Section 6.4.1.3 states no means for protection of combustible surfaces are necessary if the temperature of the wall does not exceed the room temperature by more than 60ºC. Testing of Greenstar gas-fired wall mounted boilers has shown that this temperature is not exceeded.

However, if the appliance is to be fitted in a timber frame building, the guidelines laid down in BS 5440:Part 1 and the Gas Safe publication “Gas Installations in Timber Frame Buildings” should be adhered to.

The appliances may be installed into an airing cupboard if required. Use a non-combustible perforated material (max. hole sizes of 13mm) to separate the boiler from the airing space. See section “Boiler location” on page 31.

Installation and service clearances

All Greenstar gas-fired boilers do not require compartment ventilation so long as minimum installation and service clearances are maintained, see on page 31.

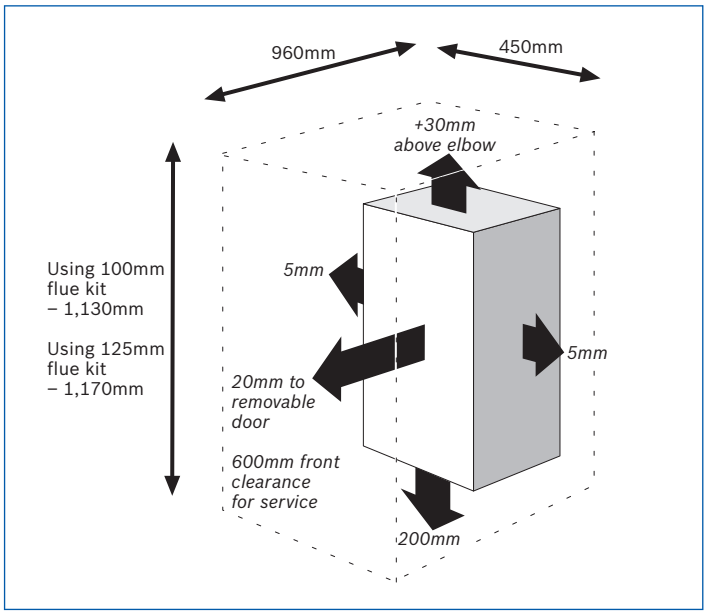

Clearances for Greenstar CDi Classic

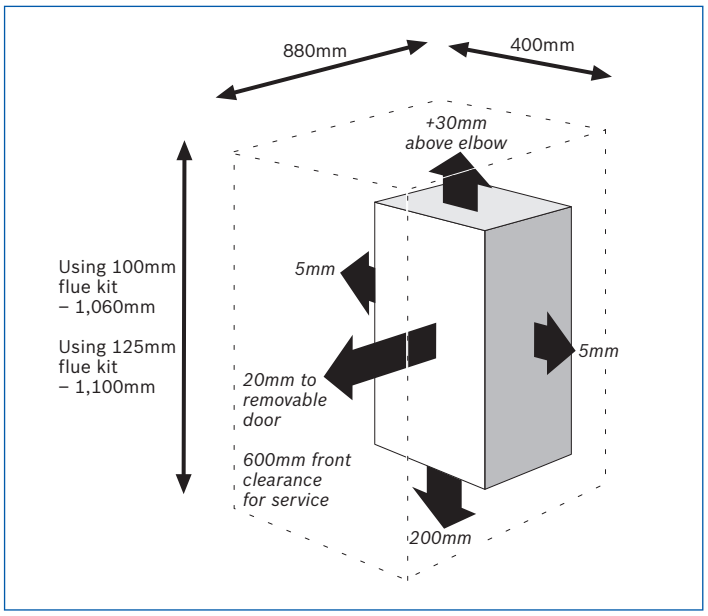

Clearances for Greenstar CDi Compact and Si Compact

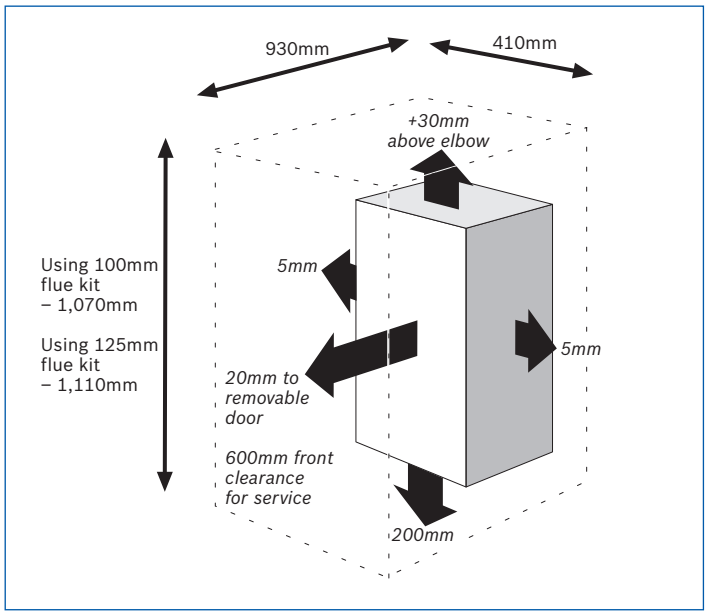

Clearances for Greenstar i

Boiler location

The appliance may be installed in any room, although particular attention is drawn to the requirements of the IEE regulations applicable, and in Scotland the electrical provisions with respect to installation in a room containing a bath or shower.

1. The room in which the appliance is installed does not require a purpose-provided air vent.
2. If the appliance is installed in a cupboard or compartment with dimensions that allow the following minimum clearances, then no ventilation is required:

Compartment installation			
	Minimum unventilated clearance (to removable door)		
Position of appliance	Greenstar CDi Classic	Greenstar CDi Compact & Si Compact	Greenstar i
In front	20mm	20mm	20mm
Below	200mm	200mm	200mm
Right side	5mm	5mm	5mm
Left side	5mm	5mm	5mm
Above flue elbow	30mm	30mm	30mm

Important: bathroom locations and clearances

- The boiler must not be installed in Zone 1
- Any switch or appliance control using mains electricity must not be within reach of a person using the bath or shower
- Electrical switches (other than pull cords), fused spurs and socket outlets must not be situated in the bathroom
- A boiler fitted with a mechanical timer or RF mechanical timer (receiver) or Greenstar Sense II may only be installed outside the shaded area. A boiler with any other timer fitted (or blanking panel for an optional programmer) can be installed in zone 2.
- Additional Residual Current Device (RCD) protection may be required.

Refer to the latest IEE wiring regulations.

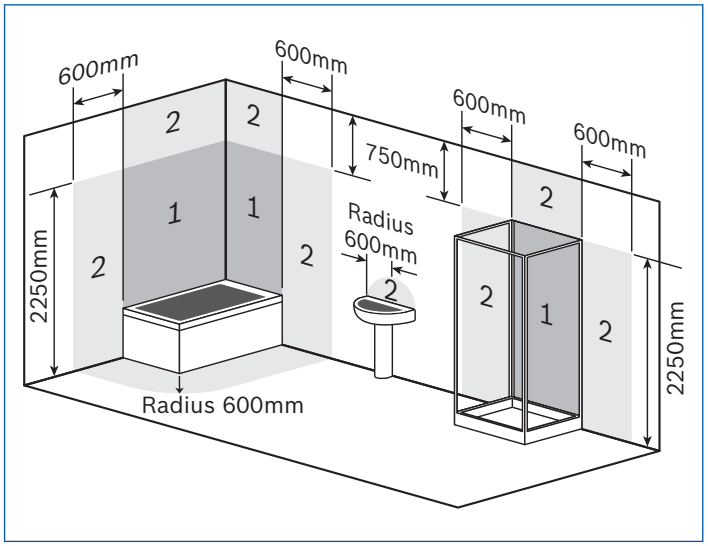

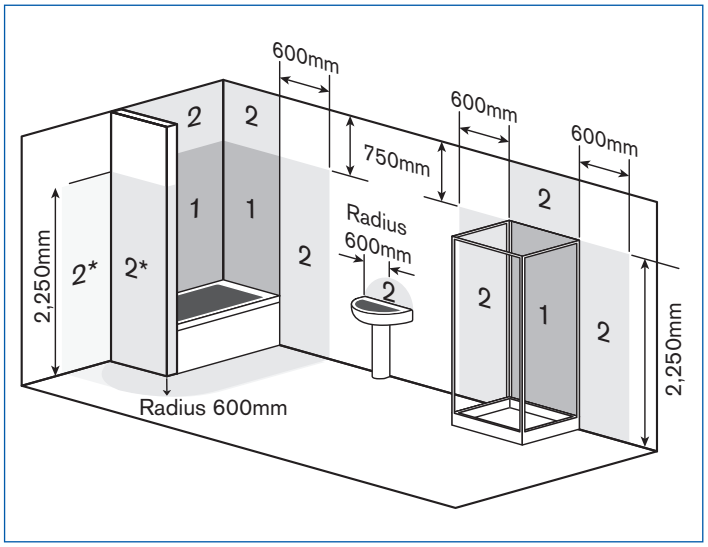

*Without the end wall, zone 2 must extend 600mm from the bath

Wall preparation

The following diagrams show the wall-mounting jigs which enable a simple and straightforward method of attaching the boiler to the wall surface.

All Greenstar wall-mounting jigs have pre-drilled fixing points and options that make hanging a Worcester Greenstar quick and easy.

After fixing the jig to the wall, the appliance can be lifted onto the jig and the union connections tightened. The pipework can be routed behind the boiler without the need for an additional wall spacing frame.

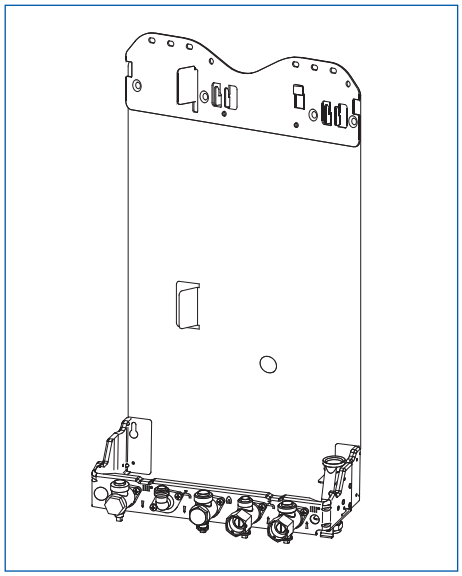

Greenstar CDi Classic wall-mounting jig

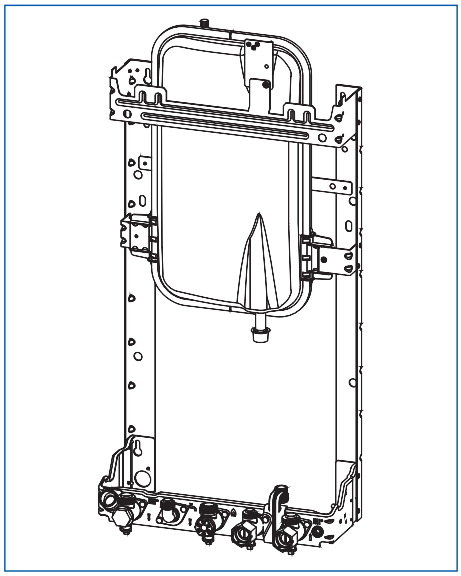

Greenstar CDi Compact and
Greenstar Si Compact wall-mounting jig

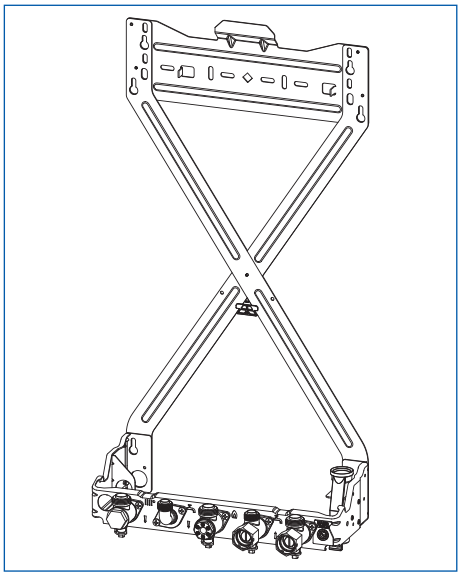

Greenstar i wall-mounting jig

Casing dimensions

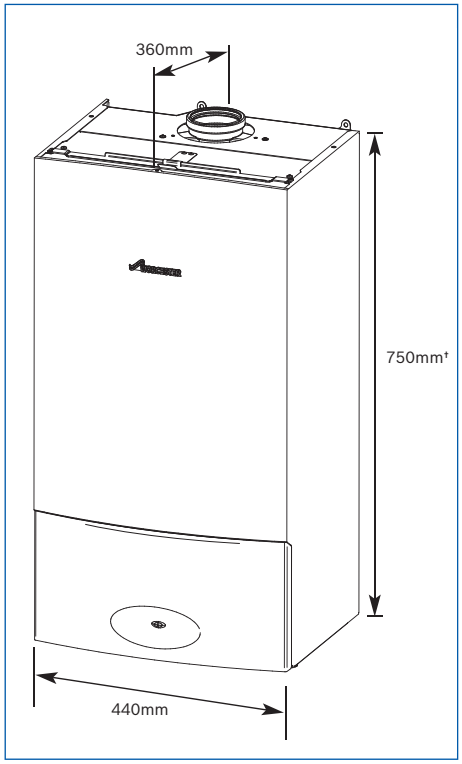

Greenstar CDi Classic
†760mm to top of casing front.

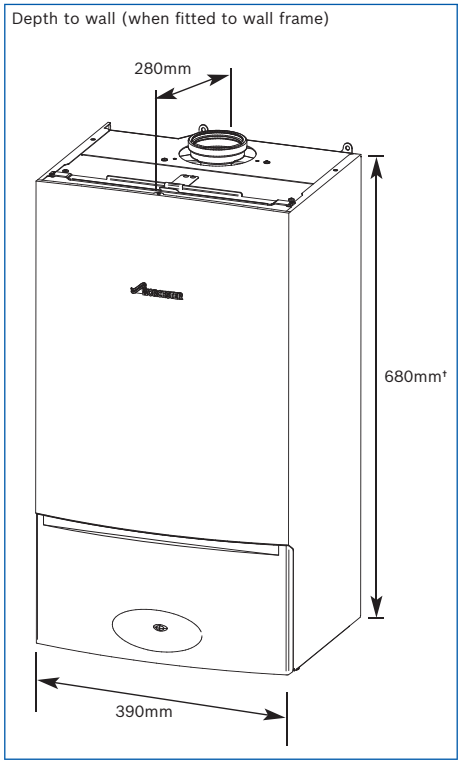

Greenstar CDi Compact and Si Compact
†690mm to top of casing front.

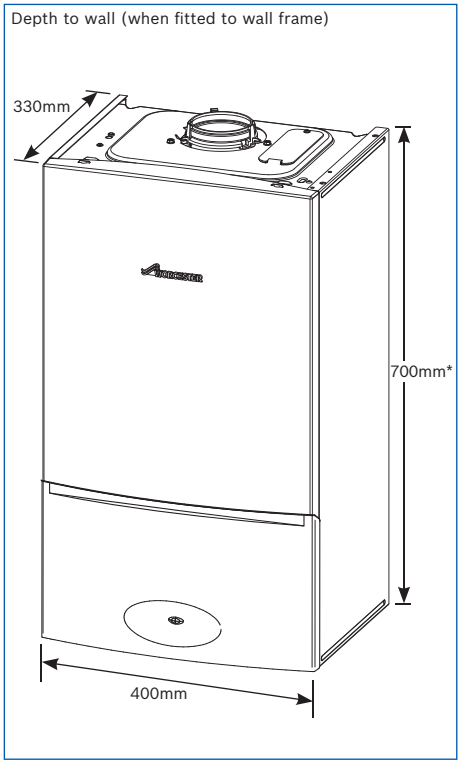

Greenstar i
**710mm to top of casing front.*

Pipework connections

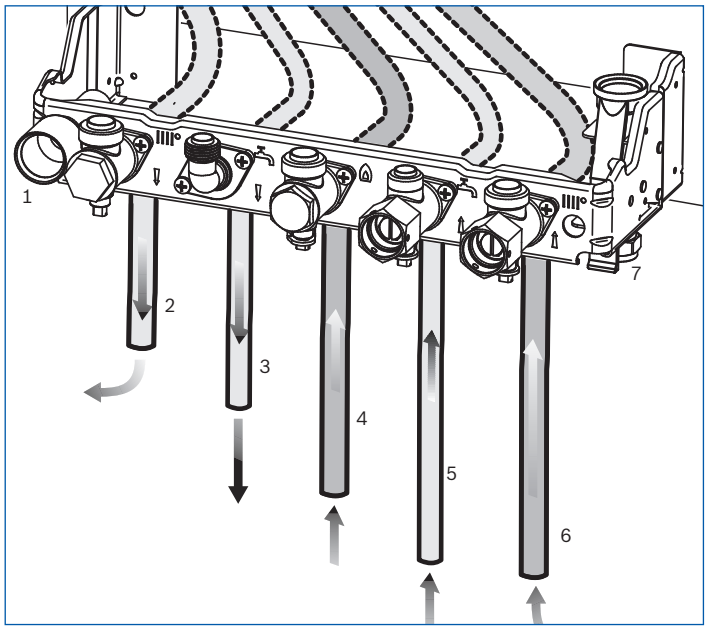

Greenstar CDi Classic

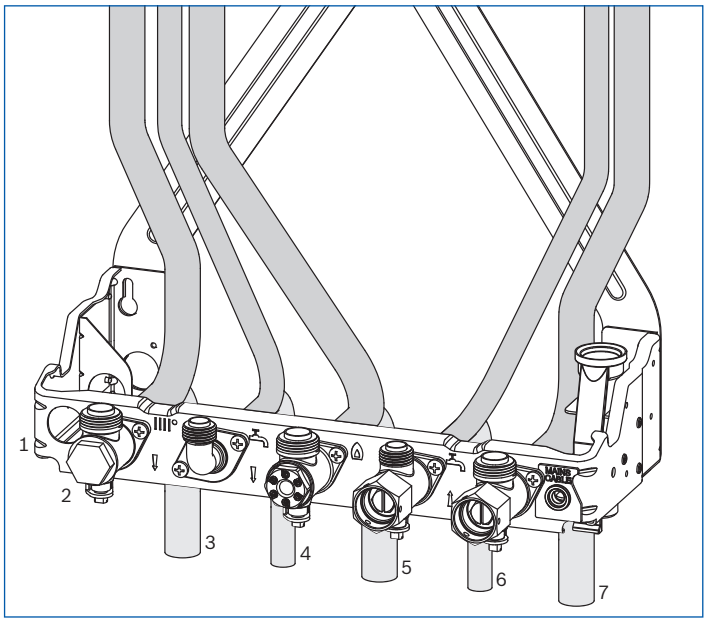

Greenstar i

Pipework connections – Greenstar CDi Classic			
	Function	From left case edge	Diameter of pipe
1	Condensate drain	55mm	22mm
2	CH flow	85mm	22mm
3	DHW outlet	148mm	15mm
4	Gas	212mm	22mm
5	DCW mains in	278mm	15mm
6	CH return	343mm	22mm
7	Pressure relief valve	375mm	15mm

Pipework connections – Greenstar i			
	Function	From left case edge	Diameter of pipe
1	Condensate drain	38mm	22mm
2	CH flow	70mm	22mm
3	DHW outlet	135mm	15mm
4	Gas	200mm	22mm
5	DCW mains in	265mm	15mm
6	CH return	330mm	22mm
7	Pressure relief valve	364mm	15mm

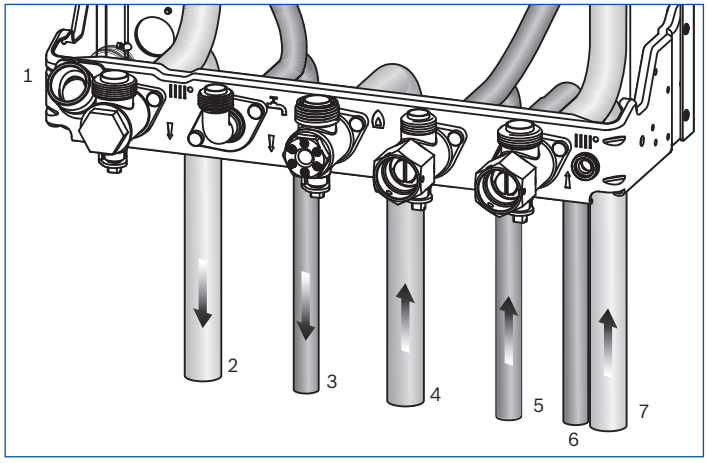

Greenstar CDi Compact and Si Compact

Pipework connections – Greenstar CDi Compact & Si Compact			
	Function	From left case edge	Diameter of pipe
1	Condensate drain	33mm	22mm
2	CH flow	65mm	22mm
3	DHW outlet	130mm	15mm
4	Gas	195mm	22mm
5	DCW mains in	260mm	15mm
6	PRV drain	291mm	15mm
7	CH return	325mm	22mm

Optional pre-piping assembly kit

The vertical pre-piping assembly kits comprises a set of pre-formed copper pipes. More information on this and other time-saving accessories can be found on page 62.

Greenstar combi installation requirements

Installation of the Greenstar combi boiler range must be in accordance with the relevant requirements of the Gas Safety (Installation Use) Regulations (as amended), current IEE Wiring Regulations, local Building Regulations, Building Standards (Scotland) regulations and bylaws of the local water company and Health and Safety Document No. 635 (Electricity at Work Regulations 1989). It should also be in accordance with the relevant recommendations of the following British Standards:
BS 6798; EN 12828; BS 5546:1; BS 5440:1; BS 5440:2; BS 6891; BS 7074; BS 7593.

Gas Safety (Installation and Use) Regulations state that all gas appliances must be installed by a Gas Safe registered person in accordance with the above regulations. Failure to install appliances correctly could lead to prosecution.

The manufacturer's notes must not be taken in any way as overriding statutory regulations.

Protecting the heating system from dirty water

It is a requirement of the British building standard, BS 7593, that all heating systems should be chemically flushed and cleansed and then an inhibitor added to help prevent future corrosion taking place. It is also beneficial and best practice within the building regulations to install a system filter.

Sealed primary systems

The Worcester Greenstar combi boilers are supplied complete with all the necessary components to form a sealed primary system. Included are an expansion vessel, a pressure relief valve (set at 3bar), an automatic air vent and a pressure gauge.

With an initial system pressure of 0.5bar, a system capacity of approximately 83 litres can be accommodated. Refer to BS 7074:Part 1 for more information.

It is important with an aluminium heat exchanger that the pH level of the water does not exceed 8. Levels in excess of this could be detrimental to the heat exchanger.

The use of a suitable inhibitor will provide a resistance to this. Contact Sentinel (Tel: 0800 3894670 or visit www.sentinel-solutions.net) or Fernox (Tel: 0870 601 5000 or visit www.fernox.com) for further details.

System filling and re-pressurising

Worcester Greenstar combi boilers are fitted to a sealed heating system which is pressurised. To maintain optimum system pressure, two options may be used: an optional Worcester integral filling link or external filling loop.

Optional Worcester integral filling link

The Worcester integral filling link simply connects between the cold main connection and the heating return circuit on the wall-mounting jig (part no. 7 716 192 281).

Worcester Keyless Filling Link

The Worcester Keyless Filling Link is an innovative accessory which has been specially designed to be directly connected to a wall mounted Worcester Greenstar combi boiler. Its simple lever operation makes system re-pressurisation easy for both the installer and end user alike, and eliminates the problems caused when a separate filling link or loop has been mislaid or lost. This feature is supplied as standard with the Greenstar CDi Classic and an accessory for the Greenstar CDi Compact, Si Compact and i. For further details see page 37 (part no. 7 716 192 610).

Valves and joints

It is very important that all valves and joints are able to sustain a working pressure of up to 3bar (45psi). Particular care should be exercised when fitting radiator valves and only those of high quality to BS 2767:10 should be used. All other valves and fittings should comply with BS 1010.

Loss of water pressure from a sealed system will require continuous recharging with fresh water and consequential introduction of air. Air is highly corrosive and will considerably reduce life expectancy of radiators, pumps etc.

Plastic pipework

The use of plastic pipework is acceptable. However, some plastics are permeable to oxygen and must be avoided. Only pipework with a polymeric barrier should be used. Please note that the first 600mm of pipework connected to the boiler must be of copper or steel.

Natural gas supply

Listed below is a representative example. Figures for other appliances can be found in the relevant installation manuals.

Model	Gas rate
42CDi Classic	4.40m^3/hr
36CDi Compact	3.93m^3/hr
30Si Compact	3.24m^3/hr
30i	3.24m^3/hr

The gas meter and supply pipes must be capable of supplying this quantity of gas in addition to the demand from any other appliance being served. It is important that a gas supply pipe of at least 22mm diameter is used. Under no circumstances should the size of the gas supply pipe be less than that of the appliance inlet connection. The meter outlet governor should be capable of ensuring a dynamic pressure of 20mbar (8in wg) at the appliance. Particular consideration should be given to the resistance to gas flow created by elbows, bends etc. Pipework should be sized to overcome this resistance.

Liquid Petroleum Gas (LPG) supply

Listed below is a representative example. Figures for other appliances can be found in the relevant installation manuals.

Model	Gas rate
42CDi Classic	3.30kg/hr
36CDi Compact	2.80kg/hr
30Si Compact	2.33kg/hr
30i	2.38kg/hr

The gas tank or bottles must be capable of supplying this quantity of gas at a nominal pressure of 37mbar (14.8in wg) at the appliance.

Electricity supply

A 3amp fused three pin plug and unswitched shuttered socket outlet (both complying with BS 1362) or preferably a double pole isolator with a contact separation of 3mm in all poles supplying the appliance should be used.

The appliance electrical circuits are also protected by an internal 2amp fuse. The appliance must be earthed.

Mains cold water supply

Water Authority requirement

A direct mains cold water connection is permitted by Water Authorities. However, it is recommended that reference be made to local requirements. In the event of difficulty, please contact Worcester Technical Support Department.

Cold water connection

Connection should be made as shown in the pipework detail and the appliance installed generally in accordance with the layout shown on page 33.

Wherever possible, the cold supply to the appliance should be the first connection off the mains supply, in order to minimise hot water flow reduction when cold water services are operated. The final 600mm of piping to the appliance should be of copper only.

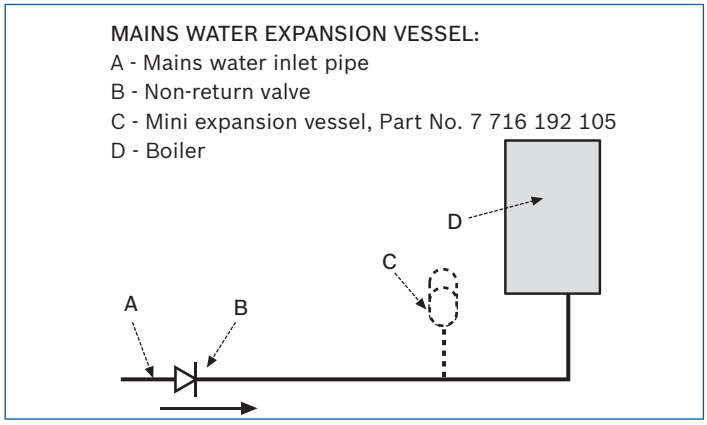

Cold water pressure

To achieve the stipulated flow rate, a working cold water mains pressure of 1.3bar is required.

However, for the Greenstar CDi Classic range to achieve the stipulated flow rate, a working cold water mains pressure of between 1.2 and 1.9bar is required (dependent on model).

The appliance will operate at a minimum working pressure of only 0.2bar (3psi); however a reduced hot water flow rate should be expected. Back-flow prevention devices, including water meters, can prevent the expansion of hot water into the cold water main. However, this can result in a pressure build-up that may cause damage to the boiler and household devices such as showers, washing machines, etc. In these cases, we recommend that a mini-expansion vessel (Part No. 7 716 192 105) be fitted adjacent to the boiler in the cold water main.

Hot water supply

All Worcester Greenstar boilers are fitted with a flow regulator set to achieve a 40°C temperature rise. This ensures comfortable bathing during the colder winter months.

For the Greenstar CDi Classic range, a domestic hot water flow regulator, set to give an optimum flow rate of between 9 and 15l/min ±15% (dependent on model) is fitted to the cold supply of the hot water heat exchanger.

The Greenstar CDi Compact flow regulators are sized between 10l and 13l.

A domestic hot water flow regulator, set to give an optimum flow rate of between 8 and 11l/min ±15% (dependent on model) is fitted to the cold supply of the hot water heat exchanger in the Greenstar Si Compact and Greenstar i combis.

As with all mains-fed systems, the flow rate of water obtainable from individual taps will vary in relation to the number of taps operating simultaneously, and will depend upon the cold mains supply available to the property.

Therefore, in order to avoid excessive starvation of flow to individual taps, flow balancing may be required by the use of proprietary constant volume flow regulators or Ball-o-Fix valves.

Hot water systems

Taps and valves

Hot and cold taps and mixing valves used with the Greenstar combi appliances must be suitable for operating at a mains pressure and temperatures of 65°C (150°F).

Use in hard water areas

As the maximum temperature of the domestic hot water heat exchanger is limited by the electronic control circuit, there is normally no need for water treatment to prevent scale accumulation.

In areas where exceptional water conditions prevail, consideration may need to be given to the fitting of a device capable of preventing scale. In such circumstances, the advice of the local water authority should be sought.

Guarantee

Worcester Greenstar combi appliances are offered with a full 5 year guarantee* on parts and labour and a 10 year guarantee* on the primary heat exchanger*. Ongoing service and maintenance contracts can be arranged through the Worcester Customer Service Department.

Please contact our guarantee registration advisors on 0330 123 2552 or visit **www.worcester-bosch.co.uk/guarantee**

5 YEAR GUARANTEE
On all Greenstar combi appliances*

10 YEAR GUARANTEE
On the primary heat exchanger*

*Subject to terms and conditions.

The Worcester Keyless Filling Link – easy to install, simple to operate

Worcester Greenstar gas-fired combi boilers are designed to deliver maximum efficiency and performance, however the heating system will occasionally need to be re-pressurised for optimum performance.

The new Worcester Keyless Filling Link has been developed to make system filling quick and easy for both the installer and the end user. The new Greenstar CDi Classic combi boilers are supplied with the Worcester Keyless Filling Link as standard.

Fewer call-outs

Some end users find conventional filling loops and separate filling links difficult to attach and use. There is also the possibility that a separate link can be lost or mislaid, often leading to the installer being called out simply to top up the system.

Quick to install, easy to use

The Worcester Keyless Filling Link connects directly to the Worcester Greenstar gas-fired combi boiler wall mounting frame with no hose or key to connect, making installations quick and simple.

The blue lever is simply pulled down until the correct pressure is achieved.

The Worcester Keyless Filling Link has a host of benefits

For the installer

- Quick to install and operate
- Reduced risk of call-outs to top up the system
- Added value for the end user
- Guaranteed Worcester quality
- WRAS approved

For the end user

- Simple lever operation, no key or hose required
- No risk of the end user losing or misplacing the filling link
- Easy to maintain optimum boiler performance
- Peace of mind
- For safe use as a filling link with the domestic water supply

Product info	
Part number	7 716 192 610

WRAS APPROVED PRODUCT

The **NEW Greenstar System Filter**

Available in 22mm and 28mm, the Worcester Greenstar System Filter has been specifically designed to combat the damaging effects of system debris and pollutants, allowing homeowners to protect their boiler or heat pump for a fraction of its cost.

Inspired by installer feedback, the new filter has been designed to make installation and servicing simpler than ever before. In addition the performance has been improved resulting in a greater collection of debris from the system.

Please note: CIBSE heating guide recommends, for a condensing boiler system, anything running continuously over 23kW is likely to require 28mm pipework and therefore a 28mm filter. However, this will be dependent on the system layout and pressure drop.

NEW features and improvements

Over-tightening prevention feature

The removable lid has been designed to prevent over-tightening and damage to the O-ring seal, eliminating the risk of leaks.

Isolation valve indicators

The isolation valves can be opened using a single 90º turn, with red and green indicators showing when the filter is in operation.

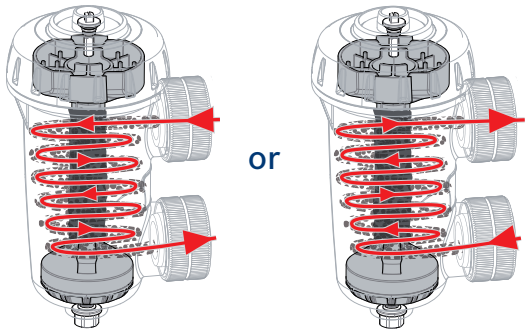

Bi-directional flow

Engineered to allow a bi-directional flow, enabling it to be installed anywhere along the return circulation pipework between the last radiator and the boiler.

Stronger magnet

A larger powerful internal magnet safeguards the boiler and wider system components.

28mm version now available

A larger version is now available for use in larger heating systems.

Pipe cut template

A cutting guide is supplied with the filter for use in measuring exact lengths of pipe to cut at the point at which the filter is being installed.

Easy to fit

Although the Greenstar System Filter shares its name with our high efficiency gas and oil-fired boilers, it can also be fitted to any typical domestic heating system.

Easy to service

The Greenstar System Filter has been designed to make servicing and maintenance simple by using the special spanners supplied and a radiator bleed key.

Installation

The filter can be installed anywhere in a heating system, except between the boiler and on the feed and expansion pipes on an open vent system. To maximise the effectiveness it should be placed on the primary heating return before the boiler and after the last radiator.

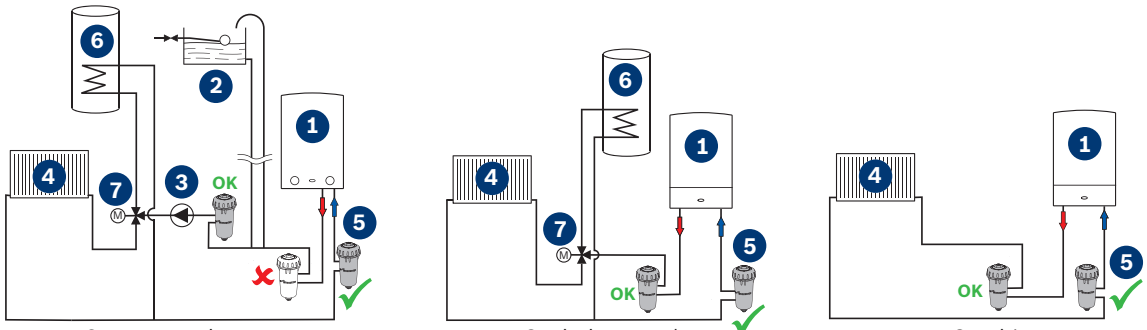

1. Boiler
2. Open vent tank
3. Pump
4. Radiator
5. System filter
6. Cylinder

When a system boiler has an internal diverter valve and two returns, the system filter should be put on the heating return and not the cylinder return.

Product info	
Part numbers	7 733 600 236 (22mm)
	7 733 600 237 (28mm)

MAGNETIC FIELD. Can be harmful to pacemaker wearers.

Condensate pipework

Important points to consider when siting a condensate drainage pipe:

- **Where a new or replacement boiler is being installed, access to an internal "gravity discharge" point should be one of the factors considered in determining boiler location**
- **The condensate pipe must be a minimum of 22mm dia. plastic pipe**
- **The condensate pipework must fall at least 52mm per metre towards the outlet and should take the shortest practicable route**
- **Ensure there are no blockages in the pipe run.**

Internal connections

In order to minimise the risk of freezing during prolonged cold spells, the following methods of installing a condensate drainage pipe should be adopted, **in order of priority**.

Wherever possible, the condensate drainage pipe should be routed and terminated so that the condensate drains away from the boiler, under gravity, to a suitable internal foul water discharge point, such as an internal soil and vent stack. A suitable permanent connection to the foul waste pipe should be used. (see fig. 1)

Alternatively, if the first option is not possible, an internal kitchen, bathroom or washing machine waste pipe, etc. can be used. (see fig. 2)

Condensate pump

Where "gravity discharge" to an internal termination is not physically possible, or where very long internal runs would be required to reach a suitable discharge point, condensate should be removed using a proprietary condensate pump, of a specification recommended by the boiler or condensate pump manufacturer.

The pump outlet pipe should discharge to a suitable internal foul water discharge point such as an internal soil and vent stack, internal kitchen, bathroom or washing machine waste pipe, etc. A suitable permanent connection to the foul waste pipe should be used. (see fig. 3)

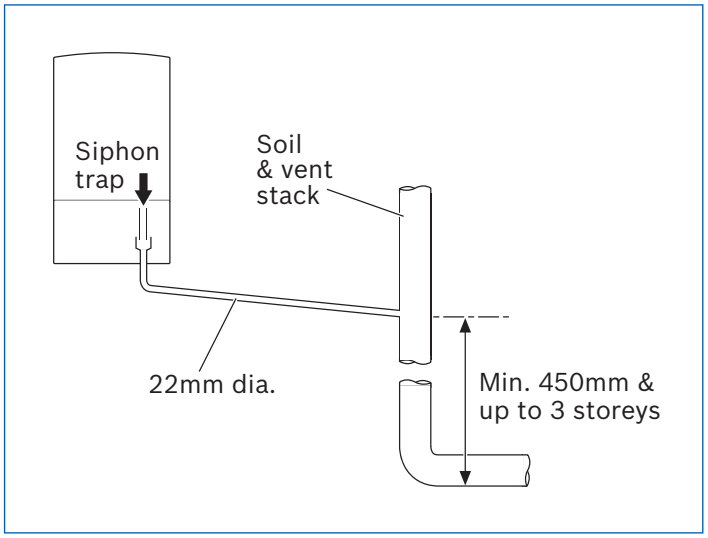

Fig. 1 Disposal to soil vent stack

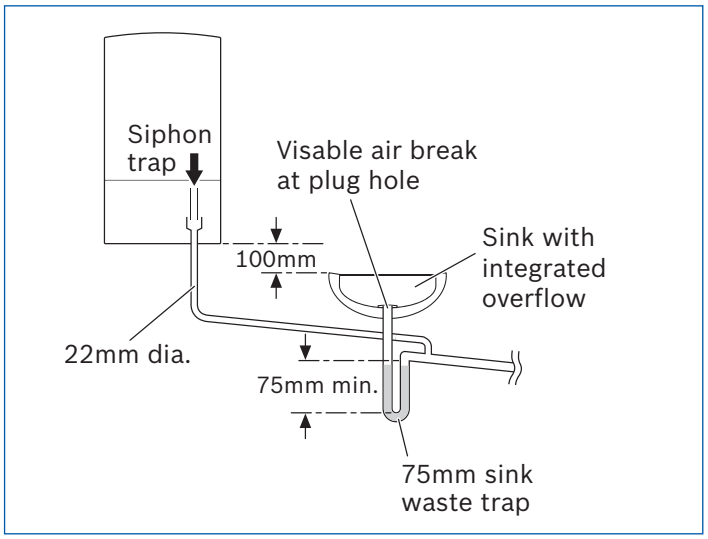

Fig. 2 Disposal to a waste pipe

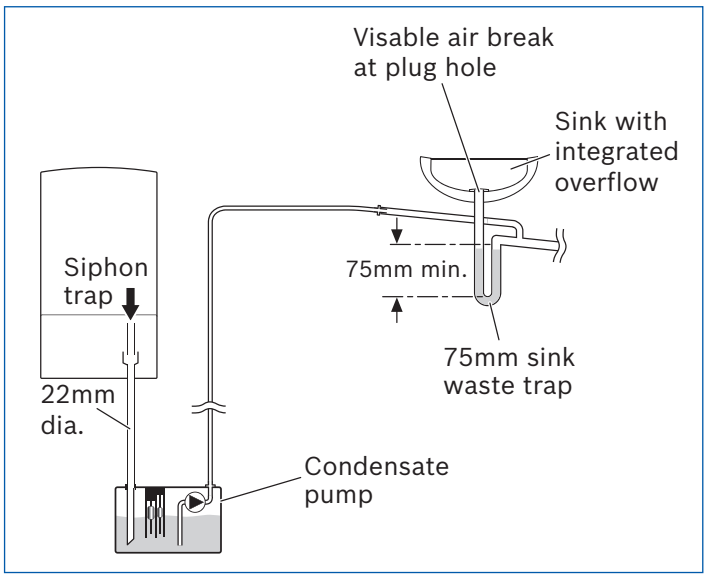

Fig. 3 Condensate pump disposal

External connections

Greenstar CDi Classic and Greenstar i

The Greenstar CDi Classic and Greenstar i have a large capacity siphonic condensate trap reducing the risk of condensate discharge freezing up in prolonged cold temperatures.

Like the CondenseSure siphon accessory, the expanded siphonic operation discharges every 15 to 20 minutes, resulting in:

- Increased velocity and flow rate
- With only 3 to 4 siphonic actions per hour, the condensate pipework is empty for longer
- Eliminated freezing potential.

For a 48 hour period at -15°C provided the installation parameters listed below are adhered to.

To maximise the effectiveness of this product the installer should:

- Keep the external pipework as short as possible. An external run pipe diameter should be increased to a minimum of 32mm and not exceed 3 metres
- Ensure a fall of at least 2.5º over horizontal sections
- Minimise the number of bends and connectors
- Remove burrs after cutting pipe
- Remove surplus solvent from the interior of the pipe.

Greenstar CDi and Si Compact

Freezing conditions

- **When the position of the boiler prevents internal routing, we recommend installing a Worcester CondenseSure siphon to minimise the risk of freezing**
- **Pipework length should be kept to a minimum and the route as vertical as possible**
- **Weather-proofing insulation must be sized when not using a CondenseSure siphon.**

Condensate waste

- **Care should be taken when siting a soak away to avoid obstructing existing services.**

If no other discharge method is possible, then the use of an externally-run condensate drainage pipe terminating at a suitable foul water discharge point (fig. 4), or purpose-designed soak away (fig. 5), may be considered. Please see installation and servicing instructions for more details.

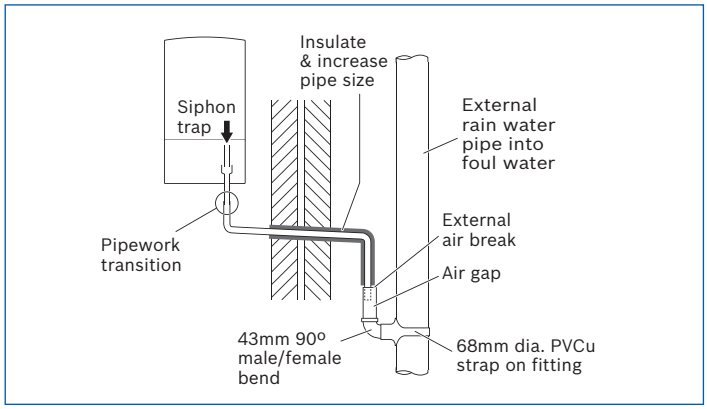

Fig. 4 Disposal into a rainwater down pipe

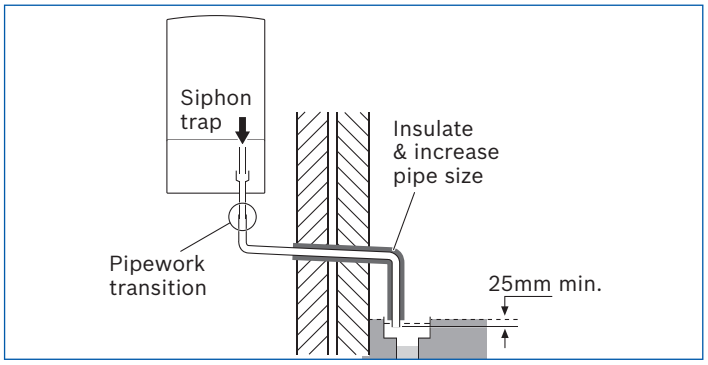

Fig. 5 External disposal

Condensate soak away (see fig. 6)

- The condensate drainage pipe may be run above or below the ground to the soak away
- The examples shown run above ground
- The soak away must use a 100mm dia. plastic tube with two rows of three 12mm holes on 25mm centres and 50mm from the bottom of the tube. The holes must face away from the house
- The tube must be surrounded by at least 100mm of limestone chippings to a depth of 400mm
- Minimum hole size for the condensate soak away must be 400mm deep by 300mm dia.

In situations where there are likely to be extremes of temperature or exposure, the use of a proprietary trace heating system for external pipework (that incorporates an external frost thermostat) should be considered. If such a system is used, the requirement to use 32mm pipe does not apply, however all other guidance above, and the instructions for the trace heating system, should be closely followed.

Unheated internal areas

Internal pipe runs in unheated areas such as lofts, basements and garages should be treated as external runs, with consideration given to using a CondenseSure siphon.

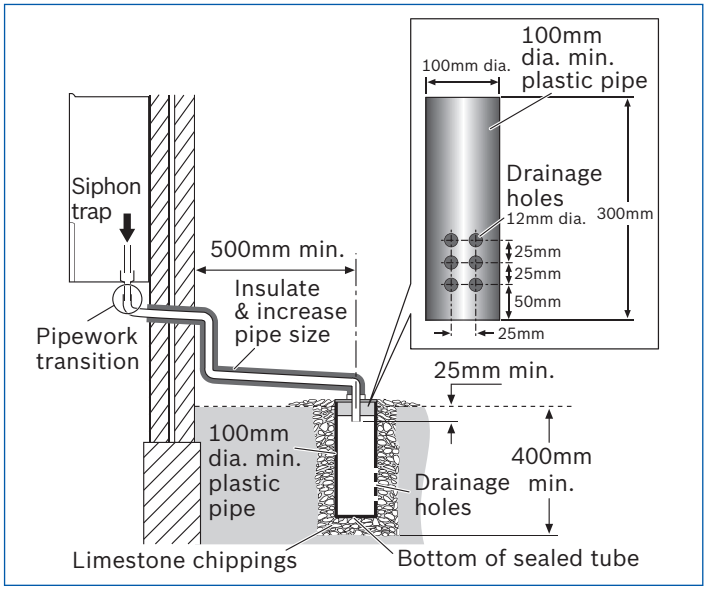

Fig. 6 Soak away

The Worcester CondenseSure siphon

With temperatures as low as -20ºC being experienced in very cold winters, practices such as externally run condensate discharge pipework are now being questioned.

The Worcester CondenseSure siphon has been designed to allow a more flexible approach to boiler siting.

Tested to extreme temperatures

The Worcester CondenseSure siphon has been extensively tested under simulated extreme weather conditions, proving its effectiveness in preventing frozen condensate at -15ºC for a sustained period of 48 hours.

CondenseSure principle of operation

Within most condensing boilers, there is an internal siphon which holds around 100ml of condensate before being released down the condensate discharge pipe. A typical high-efficiency condensing boiler will generate up to 2 litres of condensate an hour (dependant on output and temperature) and this will result in the in-built siphon discharging approximately every 3 minutes. With this frequency of discharge, it is unlikely that the condensate pipework is ever empty of condensate, consequently increasing the potential for freezing of the pipework in prolonged sub-zero temperatures.

The CondenseSure siphon connects to the boiler condensate discharge outlet and collects the condensate into a larger volume before releasing it into the discharge pipe.

With this expanded siphonic operation, the discharge from the CondenseSure increases to every 15 to 20 minutes, resulting in:

- Increased velocity and flow rate
- Only 3 to 4 siphonic actions per hour, meaning the condensate pipework is empty for longer
- Significantly decreased or even eliminated freezing potential.

The CondenseSure insulating jacket helps to retain the temperature of the condensate.

A universal fitting for new and existing installations

Although developed specifically for Worcester Greenstar gas- and oil-fired boilers, the Worcester CondenseSure can also be fitted to any make of condensing boiler for both new and retrofit installations. The CondenseSure can provide a simple solution which eliminates the need for re-siting both the new boiler and the system pipework when replacing an existing non-condensing appliance. The CondenseSure can easily be fitted to existing installations to provide peace of mind in extreme weather conditions.

Features

- **No electrical supply needed**
  Zero running costs and no wiring connection, so no need for an electrician to install.
- **Compatible with all boilers**
  Can be installed on new or existing installations and is suitable for any gas- or oil-fired condensing boilers.
- **Uses ‘free’ energy**
  By attaching the CondenseSure to the 22mm heating flow pipework the energy from the pipe is used to heat the condensate.
- **Installation flexibility**
  Can be installed under the boiler or remotely.
- **No pipe insulation needed**
  Cost-saving and aesthetically pleasing.

Ease of installation

The CondenseSure has been designed with ease of installation in mind and is suitable for most boiler applications. For maximum effectiveness, it should be installed immediately beneath the boiler where it is clipped on to the boiler's heating flow pipe and connected to its siphonic trap. If this is not practical, the CondenseSure can be wall-mounted away from the boiler and connected to a 32mm condensate discharge pipe. However, this will sacrifice the benefit of warming the condensate prior to discharge and therefore slightly reduce its performance.

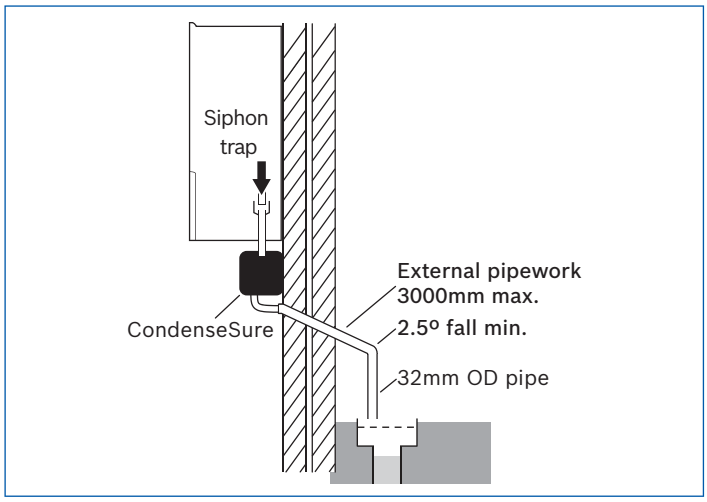

A typical installation using CondenseSure

The CondenseSure installation parameters

The CondenseSure will protect an externally-run condensate discharge pipe from freezing for 48 hours at -15°C providing the following installation parameters are met:

- The externally-run pipe length does not exceed 3 metres
- There is a fall on the discharge pipe of at least 2.5 degrees
- The discharge pipe diameter is not less than 32mm in diameter.

Whilst it is not necessary to insulate the pipework, it may be a consideration if longer lengths or if lower external temperatures are expected.

The CondenseSure clips onto the 22mm heating flow pipe using the 'free' heat to raise the condensate temperature.

Fitting to a combi boiler

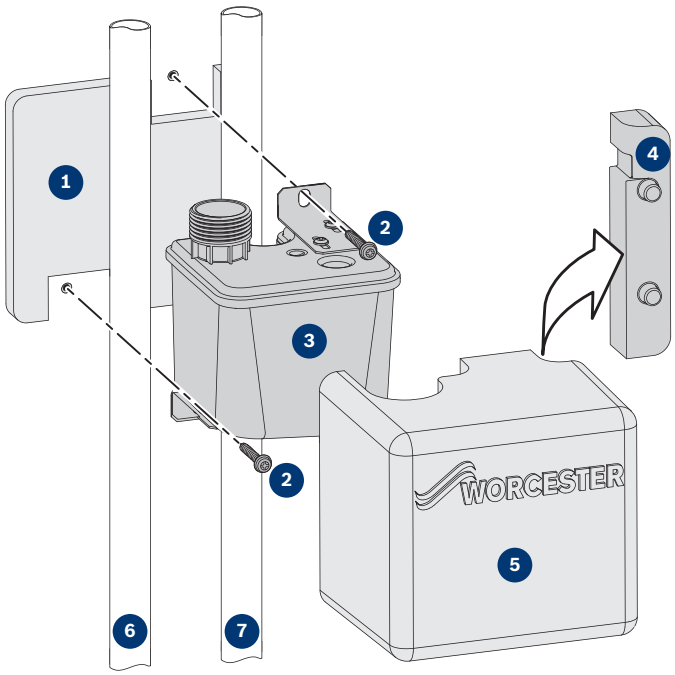

1. Foam backing with double-sided tape
2. Siphon mounting screws
3. Siphon body
4. Foam insert (used with regular or system boilers)
5. Foam cover
6. CH flow pipe
7. Boiler DHW outlet pipe

Additional installation considerations include:

- Keeping any external pipework as short as possible
- Minimising the number of bends and connections
- Removal of burrs after cutting pipe
- Removal of surplus solvent from the interior of the pipe.

The CondenseSure has no working parts to breakdown, does not use any energy and has no electrical connections, so there is no Part P requirement.

Product info	
Part number	7 716 192 746

Flue Gas Heat Recovery Unit

Save energy and reduce CO_2 emissions with the **EcoFlo** FGHR unit.

Understanding the need for specifiers and house builders to have a cost effective method of achieving SAP target emission rates, Worcester has introduced the EcoFlo Flue Gas Heat Recovery (FGHR) unit which is compatible with the latest range of Greenstar CDi Compact and Si Compact combi boilers.

How the FGHR works

The FGHR is connected directly to the flue of the Greenstar boiler. Its heat exchanger extracts residual energy from the flue gases exiting from the boiler. This energy is then used to pre-warm the water that is fed into the combi boiler reducing the amount of gas required to reach the desired hot water temperature.

The table below highlights the positive impact that the specification of an EcoFlo FGHR unit can have on a property's SAP assessed Dwelling Emission Rate (DER), allowing the example Target Emission Rate (TER) to be met and exceeded.

	TER	DER	% Difference from TER
Worcester Si Compact	15.47	15.56	-0.58
Worcester Si Compact + EcoFlo	15.57	14.96	+3.30

SAP 2009 calc based on: Mid terrace house (3 bed) – 100m²
Cavity wall – 0.25 W/m²;.K Roof – 0.1 W/m²;.K Floors – 0.12 W/m².K; Openings – 1.4 W/m²K.
Accredited thermal bridges
Q50 – 5; 3 intermittent fans; Standard programmer, room thermostat and TRV with radiators

A highly efficient solution

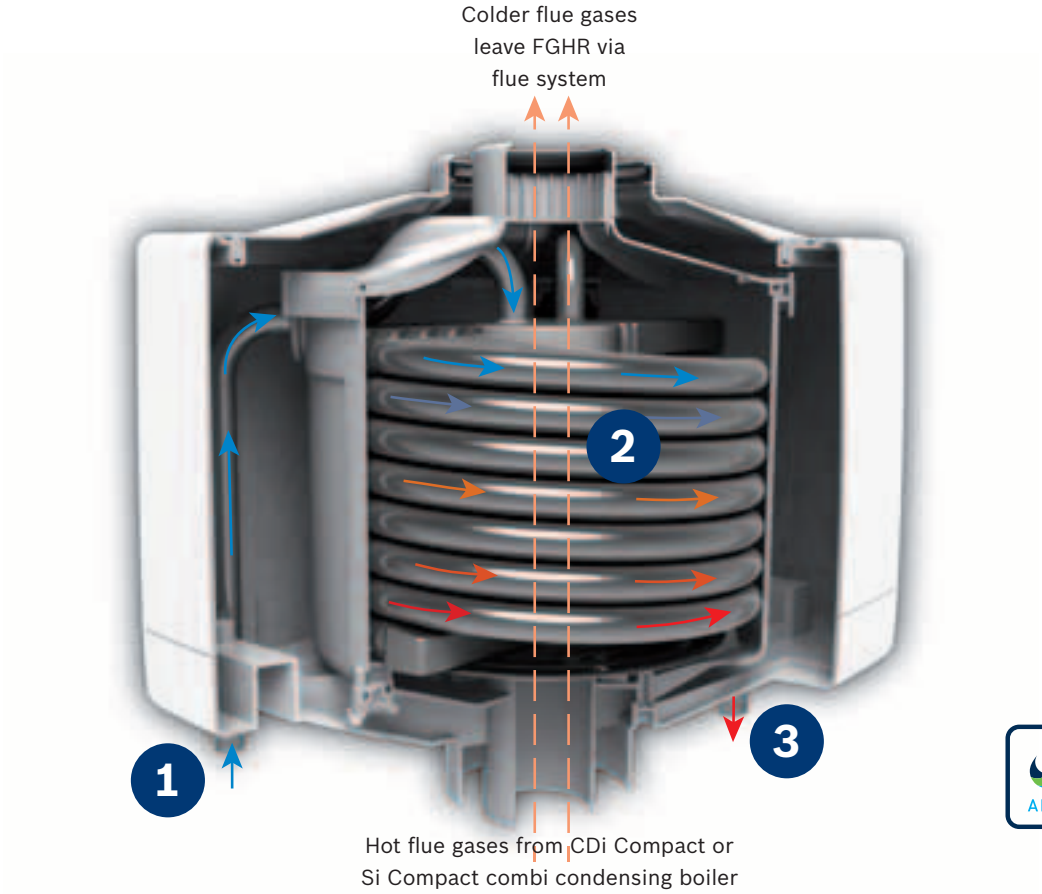

1 Cold mains water enters the EcoFlo unit.

2 Cold water passes through the heat exchange coil and is heated by the hot waste flue gases from the boiler.

3 Pre-heated water leaves the EcoFlo speeding up the heating of hot water, reducing gas consumption and CO_2 emissions.

Features and benefits

For the Specifier

SAP listed FGHR

The unit enables the heating system to meet SAP target emission rates for new build properties and is more cost-effective than other solutions such as solar thermal or heat pumps. In addition savings on building fabric such as insulation can be achieved.

Improved domestic EPC ratings

Using this energy saving measure the property receives a higher energy rating and occupier achieves lower fuel bills.

For the Installer

Ease of installation

No additional training required for a competent installer.

For the End User

Reduction in gas bills for homeowners

When fitted to a Greenstar combi, it reduces the amount of gas used to provide hot water.

Product info	
Part number	7 733 600 047
SAP Assessors select Muelink & Grol EcoFlo as the FGHR unit	

Horizontal and vertical flue terminal positioning

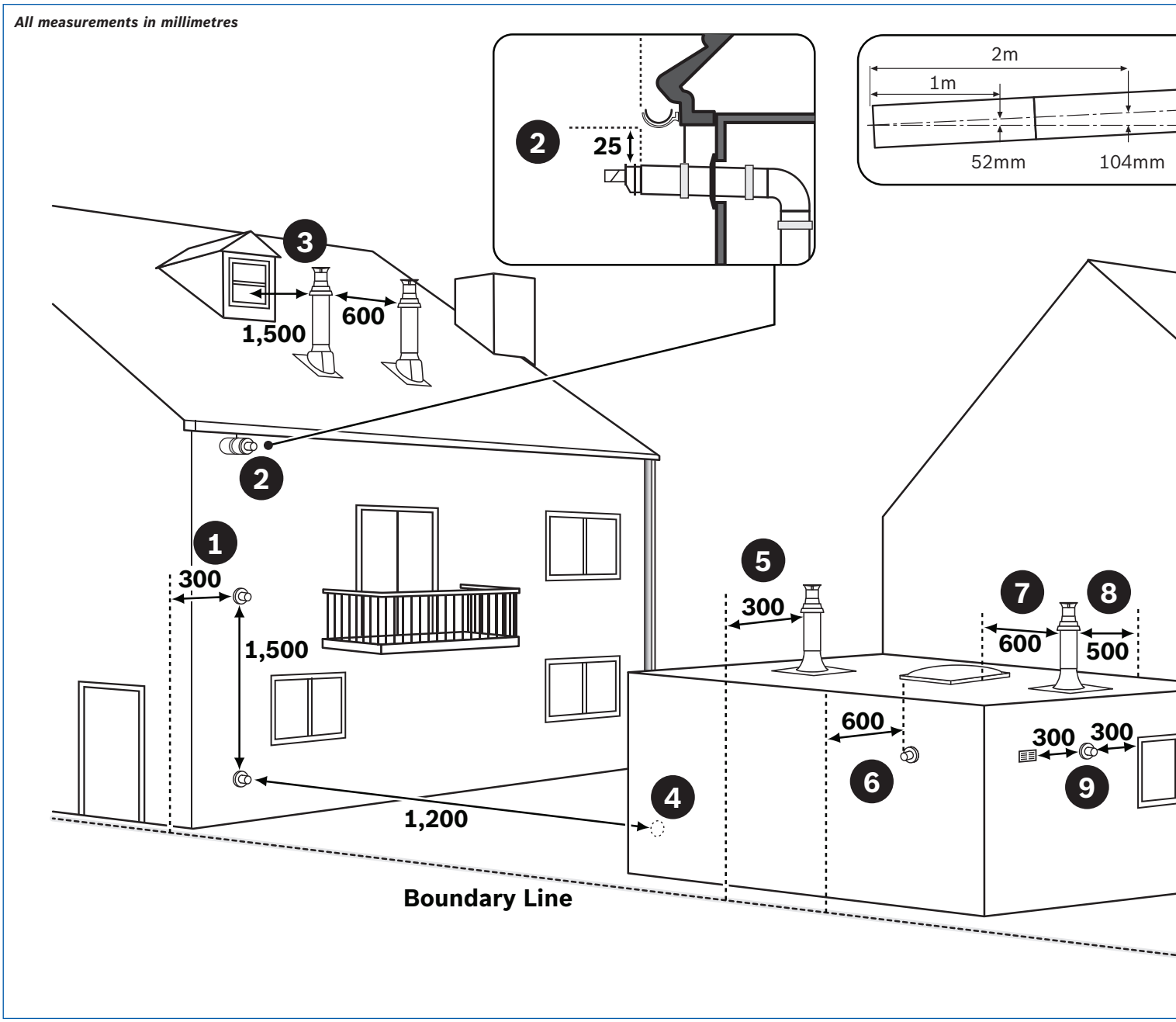

Note

- **All measurements are the minimum clearances required**
- **Terminals must be positioned so as to avoid combustion products entering the building**
- **Support the flue at approximately one metre intervals and at a change of direction, use suitable brackets and fittings.**

  Flue bracket part numbers:

  7 716 191 177 (100mm dia.)

  7 716 191 178 (100mm dia. x 6)

  7 716 191 179 (125mm dia.)

Key to illustration

1. 300mm adjacent to a boundary line.
2. The dimension below eaves, balconies and car ports can be reduced to 25mm, as long as the flue terminal is extended to clear any overhang. External flue joints must be sealed with suitable silicon sealant.
3. 1,500mm between a vertical flue terminal and a window or dormer window.
4. 1,200mm between terminals facing each other.
5. Vertical flue clearance, 300mm adjacent to a boundary line.
6. 600mm distance to a boundary line, unless it will cause a nuisance. BS 5440:Part 1 recommends that care is taken when siting terminal in relation to boundary lines.
7. 600mm minimum clearance from a skylight to a vertical flue.
8. Vertical flue clearance, 500mm to non-combustible building material, and 1,500mm clearance to combustible building material.

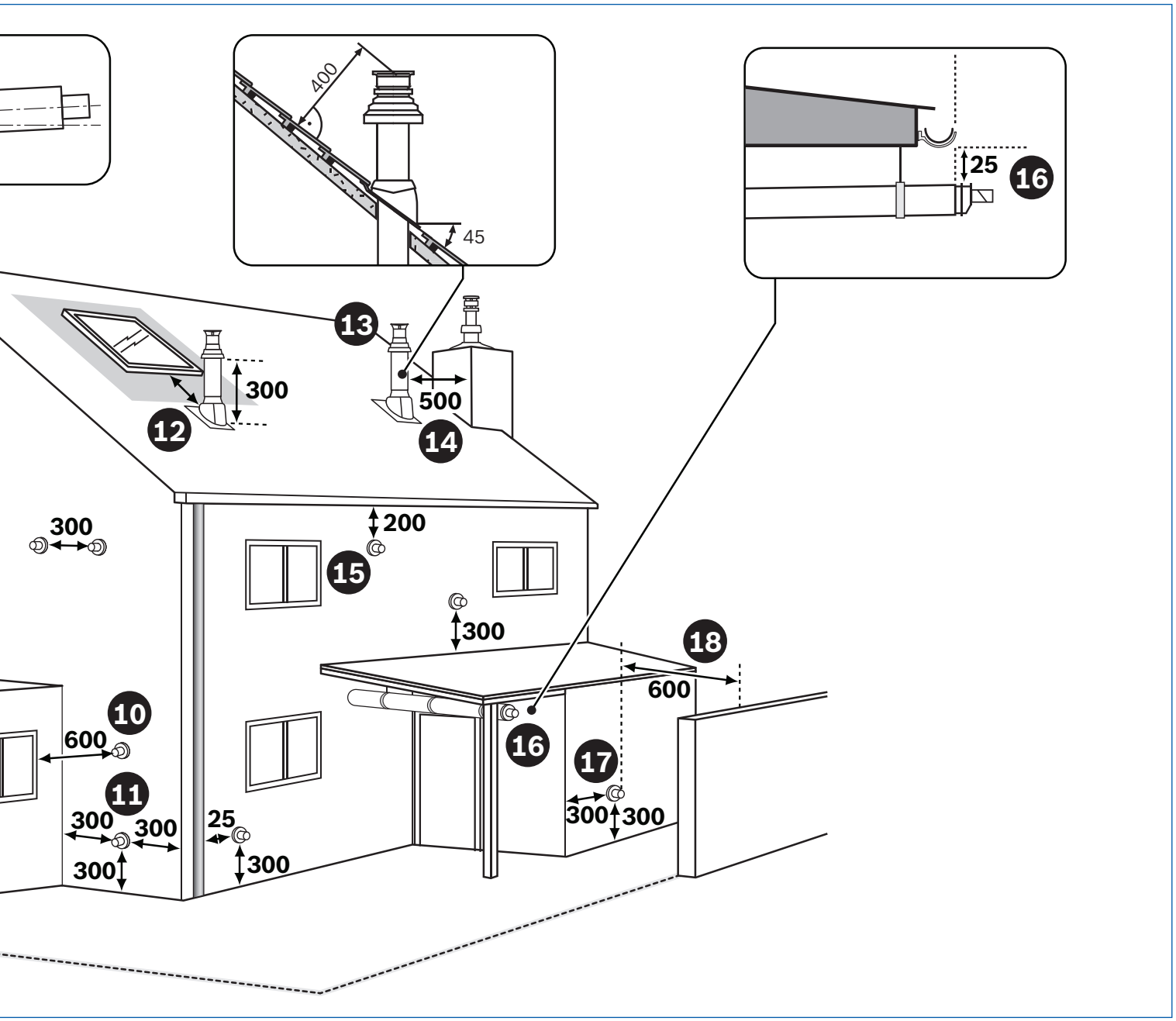

9. 300mm above, below and either side of an opening door, air vent or opening window.
10. 600mm diagonally to an opening door, air vent or opening window.
11. 300mm to an internal or external corner.
12. 2,000mm below a Velux window, 600mm above or to either side of the Velux window.
13. 400mm from a pitched roof or 500mm in regions with heavy snowfall.
14. 500mm clearance to any vertical structure on a roof, 600mm to room sealed flue or 1,500 to an open flue.
15. 200mm below eaves and 75mm below gutters, pipe and drains.
16. The dimension below eaves, balconies and car ports can be reduced to 25mm, as long as the flue terminal is extended to clear any overhang. External flue joints must be sealed with suitable silicon sealant.
17. Flue clearance must be at least 300mm from the ground. Terminal guards must be fitted if the flue is less than 2 metres from the ground or if a person could come into contact with the flue terminal.
18. 600mm distance to a surface facing a terminal, unless it will cause a nuisance. BS 5440: Part 1 recommends that care is taken when siting terminals in relation to surfaces facing a terminal.

- **Installations in car ports are not recommended**
- **The flue cannot be lower than 1,000mm from the top of a light well due to the build-up of combustion products**
- **Dimensions from a flue terminal to a fanned air inlet to be determined by the ventilation equipment manufacturer.**

Greenstar combi boiler range horizontal fluing options

The Greenstar combi boiler range offers the choice of 2 differently sized horizontal RSF flue systems, a 100mm diameter telescopic flue kit including a plume management kit, and a 125mm diameter telescopic flue kit. Both systems have different maximum lengths. The following diagrams detail the permissible lengths.

Horizontal RS flue

Flue diameter	100mm	125mm
Greenstar CDi Classic series		
Minimum flue length	350mm*	405mm
Maximum flue length 29CDi Classic	7,900mm	18,500mm
34CDi Classic	7,000mm	16,000mm
38CDi Classic	6,000mm	12,500mm
42CDi Classic	6,000mm	12,000mm
Greenstar CDi Compact and Si Compact series		
Minimum flue length	350mm*	405mm
Maximum flue length	6,000mm	15,000mm
Greenstar i series		
Minimum flue length	350mm*	405mm
Maximum flue length	4,600mm	13,000mm

Can be cut to 130mm. Please refer to instructions.

100mm dia. standard telescopic flue kit

1 x flue turret elbow
570mm (100mm dia.) of flue duct
1 x weather sealing ring
1 x internal collar
Part No. 7 716 191 082

125mm dia. standard telescopic flue kit

1 x flue turret elbow
600mm (125mm dia.) of flue duct including terminal (as measured from centre of flue outlet)
1 x weather sealing plate
1 x internal plate
Part No. 7 719 003 702

Accessories

Components	Part No.	Description
100mm diameter		
	7 716 191 082	Standard telescopic flue kit (350 - 570mm)
	7 716 191 171	Long telescopic flue kit (570 - 790mm)
	7 716 191 083	Extension flue kit (960mm*)
	7 716 191 172	2m flue extension
	7 716 191 133	Short flue extension (220mm*)
	7 716 191 084	90º bend
	7 716 191 085	45º bend
	7 719 002 432	High level horizontal flue adaptor
	7 733 600 048^	High level horizontal telescopic flue kit
	7 716 191 177	Support bracket kit
	7 716 191 178	Support bracket kit (6 pack)

Dimensions when fitted

125mm diameter		
	7 719 003 702	Standard telescopic flue kit
	7 719 003 666	Extension flue kit (960mm*)
	7 719 003 664	90º bend
	7 719 003 665	45º bend
	7 719 002 433	High level horizontal flue adaptor
	7 716 191 179	Support bracket kit

Dimensions when fitted. ^For use with high level horizontal flue adaptor.

The following criteria should be noted when planning the installation:

- The concentric flue system must be inclined at 3º (52mm per metre) from the appliance, to allow condensate to drain back into the boiler
- A white plume of condensation will be emitted from the terminal because the appliance operates at high efficiency. Care must be taken when selecting the flue terminal position
- To achieve a maximum flue length, one of the extension flue kits will need to be cut so that the permitted maximum flue length is not exceeded
- Horizontal flue options 1-6 illustrate common flue installations. Other configurations of the flue system are possible up to, and not exceeding, the stated maximum flue lengths.

Option 1: Standard horizontal flue assembly

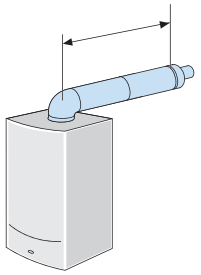

Components		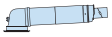
Part No. 100mm		7 716 191 082
Part No. 125mm		7 719 003 702
Maximum lengths (mm) & no. of components required		
Greenstar CDi Classic series		
100mm	570	1
125mm	600	1
Greenstar CDi Compact and Si Compact series		
100mm	570	1
125mm	600	1
Greenstar i series		
100mm	570	1
125mm	600	1

Option 2: Extension flue horizontal

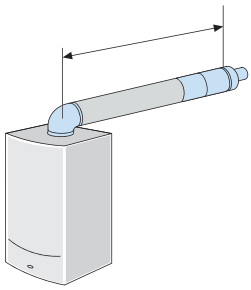

Components		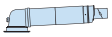	
Part No. 100mm		7 716 191 082	7 716 191 083
Part No. 125mm		7 719 003 702	7 719 003 666
Maximum lengths (mm) & no. of components required			
Greenstar 29CDi Classic			
100mm	7,900	1	up to 8
125mm	18,500	1	up to 19
Greenstar 34CDi Classic			
100mm	7,000	1	up to 7
125mm	16,000	1	up to 16
Greenstar 38CDi Classic			
100mm	6,000	1	up to 6
125mm	12,500	1	up to 13
Greenstar 42CDi Classic			
100mm	6,000	1	up to 6
125mm	12,000	1	up to 12
Greenstar CDi Compact and Si Compact series			
100mm	6,000	1	up to 6
125mm	15,000	1	up to 15
Greenstar i series			
100mm	4,600	1	up to 4
125mm	13,000	1	up to 13

Note: The short flue extension (100mm dia.) may be used as an alternative to the standard extension as required up to the maximum flue lengths stated (Part No. 7 716 191 133).

Note: The maximum flue length must be reduced by the following amounts for each bend used.

	45º bend	90º bend
Greenstar CDi Classic 60/100mm flues	750mm	1,500mm
Greenstar CDi Classic 80/125mm flues	1,000mm	2,000mm
Greenstar CDi Compact and Si Compact – all flue sizes	1,000mm	2,000mm
Greenstar i – all flue sizes	1,000mm	2,000mm

Option 3: Extension flue horizontal using a second 90º bend

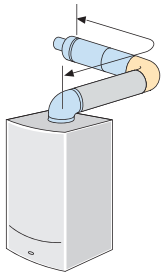

Components				
Part No. 100mm		7 716 191 082	7 716 191 083	7 716 191 084
Part No. 125mm		7 719 003 702	7 719 003 666	7 719 003 664
Maximum lengths (mm) & no. of components required				
Greenstar 29CDi Classic				
100mm	6,400	1	up to 6	1
125mm	16,500	1	up to 17	1
Greenstar 34CDi Classic				
100mm	5,500	1	up to 6	1
125mm	14,000	1	up to 14	1
Greenstar 38CDi Classic				
100mm	4,500	1	up to 4	1
125mm	10,500	1	up to 11	1
Greenstar 42CDi Classic				
100mm	4,500	1	up to 4	1
125mm	10,000	1	up to 10	1
Greenstar CDi Compact and Si Compact series				
100mm	4,000	1	up to 4	1
125mm	13,000	1	up to 13	1
Greenstar i series				
100mm	2,600	1	up to 3	1
125mm	11,000	1	up to 11	1

Option 4: Extension flue horizontal and upwards

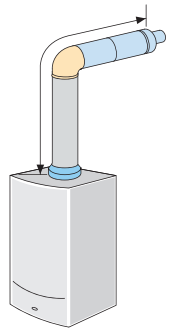

Components					
Part No. 100mm		7 716 191 082	7 716 191 083	7 716 191 084	7 719 002 432
Part No. 125mm		7 719 003 702	7 719 003 666	7 719 003 664	7 719 002 433
Maximum lengths (mm) & no. of components required					
Greenstar 29CDi Classic					
100mm	7,900	1	up to 8	1	1
125mm	18,500	1	up to 19	1	1
Greenstar 34CDi Classic					
100mm	7,000	1	up to 7	1	1
125mm	16,000	1	up to 16	1	1
Greenstar 38CDi Classic					
100mm	6,000	1	up to 6	1	1
125mm	12,500	1	up to 13	1	1
Greenstar 42CDi Classic					
100mm	6,000	1	up to 6	1	1
125mm	12,000	1	up to 12	1	1
Greenstar CDi Compact and Si Compact series					
100mm	6,000	1	up to 6	1	1
125mm	15,000	1	up to 15	1	1
Greenstar i series					
100mm	4,600	1	up to 4	1	1
125mm	13,000	1	up to 13	1	1

Note: The short flue extension (100mm dia.) may be used as an alternative to the standard extension as required up to the maximum flue lengths stated (Part No. 7 716 191 133).

Note: The maximum flue length must be reduced by the following amounts for each bend used.

	45º bend	90º bend
Greenstar CDi Classic 60/100mm flues	750mm	1,500mm
Greenstar CDi Classic 80/125mm flues	1,000mm	2,000mm
Greenstar CDi Compact and Si Compact – all flue sizes	1,000mm	2,000mm
Greenstar i – all flue sizes	1,000mm	2,000mm

Option 5: Extension flue upwards and horizontal using a second 90º bend

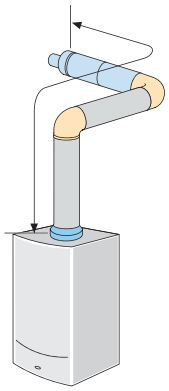

Components					
Part No. 100mm		7 716 191 082	7 716 191 083	7 716 191 084	7 719 002 432
Part No. 125mm		7 719 003 702	7 719 003 666	7 719 003 664	7 719 002 433
Maximum lengths (mm) & no. of components required					
Greenstar 29CDi Classic					
100mm	6,400	1	up to 6	2	1
125mm	16,500	1	up to 17	2	1
Greenstar 34CDi Classic					
100mm	5,500	1	up to 6	2	1
125mm	14,000	1	up to 14	2	1
Greenstar 38CDi Classic					
100mm	4,500	1	up to 4	2	1
125mm	10,500	1	up to 11	2	1
Greenstar 42CDi Classic					
100mm	4,500	1	up to 4	2	1
125mm	10,000	1	up to 10	2	1
Greenstar CDi Compact and Si Compact series					
100mm	4,000	1	up to 4	2	1
125mm	13,000	1	up to 13	2	1
Greenstar i series					
100mm	2,600	1	up to 3	2	1
125mm	11,000	1	up to 11	2	1

Note: The short flue extension (100mm dia.) may be used as an alternative to the standard extension as required up to the maximum flue lengths stated (Part No. 7 716 191 133).

Option 6: Extension flue upwards and horizontal using a third 90º bend

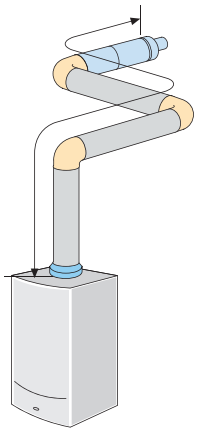

Components					
Part No. 100mm		7 716 191 082	7 716 191 083	7 716 191 084	7 719 002 432
Part No. 125mm		7 719 003 702	7 719 003 666	7 719 003 664	7 719 002 433
Maximum lengths (mm) & no. of components required					
Greenstar 29CDi Classic					
100mm	4,900	1	up to 5	3	1
125mm	14,500	1	up to 15	3	1
Greenstar 34CDi Classic					
100mm	4,000	1	up to 4	3	1
125mm	12,000	1	up to 12	3	1
Greenstar 38CDi Classic					
100mm	3,000	1	up to 3	3	1
125mm	8,500	1	up to 9	3	1
Greenstar 42CDi Classic					
100mm	3,000	1	up to 3	3	1
125mm	8,000	1	up to 8	3	1
Greenstar CDi Compact and Si Compact series					
100mm	2,000	1	up to 2	3	1
125mm	11,000	1	up to 11	3	1
Greenstar i series					
125mm	9,000	1	up to 9	3	1

45º options available

Note: The maximum flue length must be reduced by the following amounts for each bend used.

	45º bend	90º bend
Greenstar CDi Classic 60/100mm flues	750mm	1,500mm
Greenstar CDi Classic 80/125mm flues	1,000mm	2,000mm
Greenstar CDi Compact and Si Compact – all flue sizes	1,000mm	2,000mm
Greenstar i – all flue sizes	1,000mm	2,000mm

Greenstar combi boiler range vertical fluing options

The Greenstar combi boiler range offers the choice of 2 differently sized vertical RSF flue systems, 100mm and 125mm. Both systems have different maximum lengths. The following diagrams detail the permissible lengths.

Vertical RSF flue

Flue diameter	100mm	125mm
Greenstar CDi Classic series		
Minimum flue length	1,090mm	1,365mm
Maximum flue length (inc. adaptor) 29CDi Classic	9,400mm	18,500mm
34CDi Classic	8,000mm	16,000mm
38CDi Classic	7,500mm	16,000mm
42CDi Classic	7,500mm	16,000mm
Greenstar CDi Compact and Si Compact series		
Minimum flue length	1,090mm	1,365mm
Maximum flue length (inc. adaptor)	6,000mm	15,000mm
Greenstar i series		
Minimum flue length	1,090mm	1,365mm
Maximum flue length (inc. adaptor)	6,400mm	15,000mm

100mm dia. vertical balanced flue kit

1 x flue terminal assembly
1 x weather sealing collar
1 x fire stop spacer
1 x vertical adaptor

Part No. 7 719 002 430

125mm dia. vertical balanced flue kit

1 x flue terminal assembly
1 x weather sealing collar
1 x fire stop spacer
1 x vertical adaptor

Part No. 7 719 002 431

Accessories

Components	Part No.	Description
100mm diameter		
	7 719 002 430	Vertical 1,090mm balanced flue kit (inc. adaptor)
	7 716 191 083	Extension flue kit (960mm*)
	7 716 191 172	2m flue extension
	7 716 191 133	Short flue extension (220mm*)
	7 716 191 084	90º bend
	7 716 191 085	45º bend
	7 716 191 090	Flashing – flat roof
	7 716 191 091	Flashing – pitched roof

**Dimensions when fitted*

125mm diameter		
	7 719 002 431	Vertical 1,365mm balanced flue kit (inc. adaptor)
	7 719 003 666	Extension flue kit (960mm*)
	7 719 003 664	90º bend
	7 719 003 665	45º bend
	7 716 191 090	Flashing – flat roof
	7 716 191 091	Flashing – pitched roof

**Dimensions when fitted*

The following criteria should be noted when planning the installation:

- Because the appliance operates at high efficiency, a white plume of condensation will be emitted from the terminal. Care must be taken when selecting the flue terminal position
- To achieve a maximum flue length, one of the extension flue kits will need to be cut so that the permitted maximum flue length is not exceeded
- Vertical flue options 1-4 illustrate common flue installations. Other configurations of the flue system are possible up to, and not exceeding, the stated maximum flue lengths.

Option 1: Minimum height

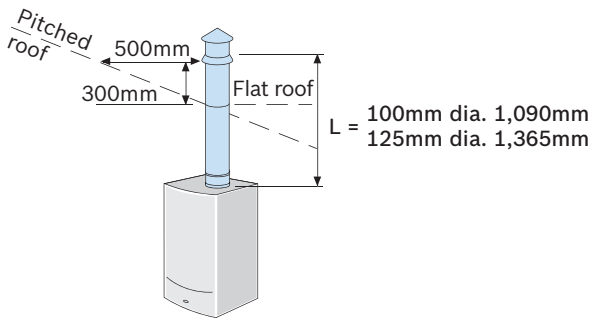

Components		
Part No. 100mm		7 719 002 430
Part No. 125mm		7 719 002 431
Maximum lengths (mm) & no. of components required		
Greenstar 29CDi Classic		
100mm	1,090	1
125mm	1,365	1
Greenstar 34CDi Classic		
100mm	1,090	1
125mm	1,365	1
Greenstar 38CDi Classic		
100mm	1,090	1
125mm	1,365	1
Greenstar 42CDi Classic		
100mm	1,090	1
125mm	1,365	1
Greenstar CDi Compact and Si Compact series		
100mm	1,090	1
125mm	1,365	1
Greenstar i series		
100mm	1,090	1
125mm	1,365	1

Note: The short flue extension (100mm dia.) may be used as an alternative to the standard extension as required up to the maximum flue lengths stated (Part No. 7 716 191 133).

Option 2: Vertical balanced flue system maximum height

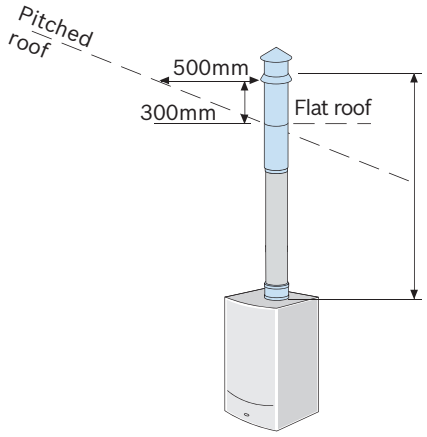

Components			
Part No. 100mm		7 719 002 430	7 716 191 083
Part No. 125mm		7 719 002 431	7 719 003 666
Maximum lengths (mm) & no. of components required			
Greenstar 29CDi Classic			
100mm	9,400	1	up to 9
125mm	18,500	1	up to 18
Greenstar 34CDi Classic			
100mm	8,000	1	up to 8
125mm	16,000	1	up to 16
Greenstar 38CDi Classic			
100mm	7,500	1	up to 7
125mm	16,000	1	up to 16
Greenstar 42CDi Classic			
100mm	7,500	1	up to 7
125mm	16,000	1	up to 16
Greenstar CDi Compact and Si Compact series			
100mm	6,000	1	up to 5
125mm	15,000	1	up to 14
Greenstar i series			
100mm	6,400	1	up to 6
125mm	15,000	1	up to 14

Note: The maximum flue length must be reduced by the following amounts for each bend used.

	45º bend	90º bend
Greenstar CDi Classic 60/100mm flues	750mm	1,500mm
Greenstar CDi Classic 80/125mm flues	1,000mm	2,000mm
Greenstar CDi Compact and Si Compact – all flue sizes	1,000mm	2,000mm
Greenstar i – all flue sizes	1,000mm	2,000mm

Option 3: Vertical balanced flue system with two 45º bends

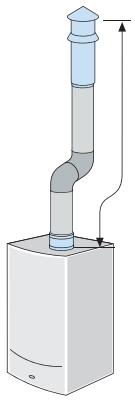

Components				
Part No. 100mm		7 719 002 430	7 716 191 083	7 716 191 085
Part No. 125mm		7 719 002 431	7 719 003 666	7 719 003 665
Maximum lengths (mm) & no. of components required				
Greenstar 29CDi Classic				
100mm	7,900	1	up to 7	2
125mm	16,500	1	up to 16	2
Greenstar 34CDi Classic				
100mm	6,500	1	up to 6	2
125mm	14,000	1	up to 14	2
Greenstar 38CDi Classic				
100mm	6,000	1	up to 6	2
125mm	14,000	1	up to 14	2
Greenstar 42CDi Classic				
100mm	6,000	1	up to 6	2
125mm	14,000	1	up to 14	2
Greenstar CDi Compact and Si Compact series				
100mm	4,000	1	up to 3	1
125mm	13,000	1	up to 12	1
Greenstar i series				
100mm	4,400	1	up to 4	2
125mm	13,000	1	up to 13	2

Note: The short flue extension (100mm dia.) may be used as an alternative to the standard extension as required up to the maximum flue lengths stated (Part No. 7 716 191 133).

Option 4: Vertical balanced flue system with two 90º bends

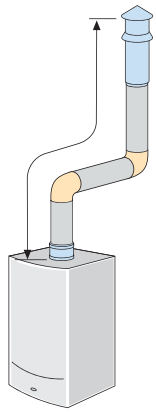

Components				
Part No. 100mm		7 719 002 430	7 716 191 083	7 716 191 084
Part No. 125mm		7 719 002 431	7 719 003 666	7 719 003 664
Maximum lengths (mm) & no. of components required				
Greenstar 29CDi Classic				
100mm	6,400	1	up to 6	2
125mm	14,500	1	up to 14	2
Greenstar 34CDi Classic				
100mm	5,000	1	up to 4	2
125mm	12,000	1	up to 11	2
Greenstar 38CDi Classic				
100mm	4,500	1	up to 4	2
125mm	12,000	1	up to 11	2
Greenstar 42CDi Classic				
100mm	4,500	1	up to 4	2
125mm	12,000	1	up to 11	2
Greenstar CDi Compact and Si Compact series				
100mm	2,000	1	up to 1	2
125mm	11,000	1	up to 10	2
Greenstar i series				
100mm	2,400	1	up to 2	2
125mm	11,000	1	up to 10	2

Note: The maximum flue length must be reduced by the following amounts for each bend used.

	45º bend	90º bend
Greenstar CDi Classic 60/100mm flues	750mm	1,500mm
Greenstar CDi Classic 80/125mm flues	1,000mm	2,000mm
Greenstar CDi Compact and Si Compact – all flue sizes	1,000mm	2,000mm
Greenstar i – all flue sizes	1,000mm	2,000mm

Plume management terminal positioning

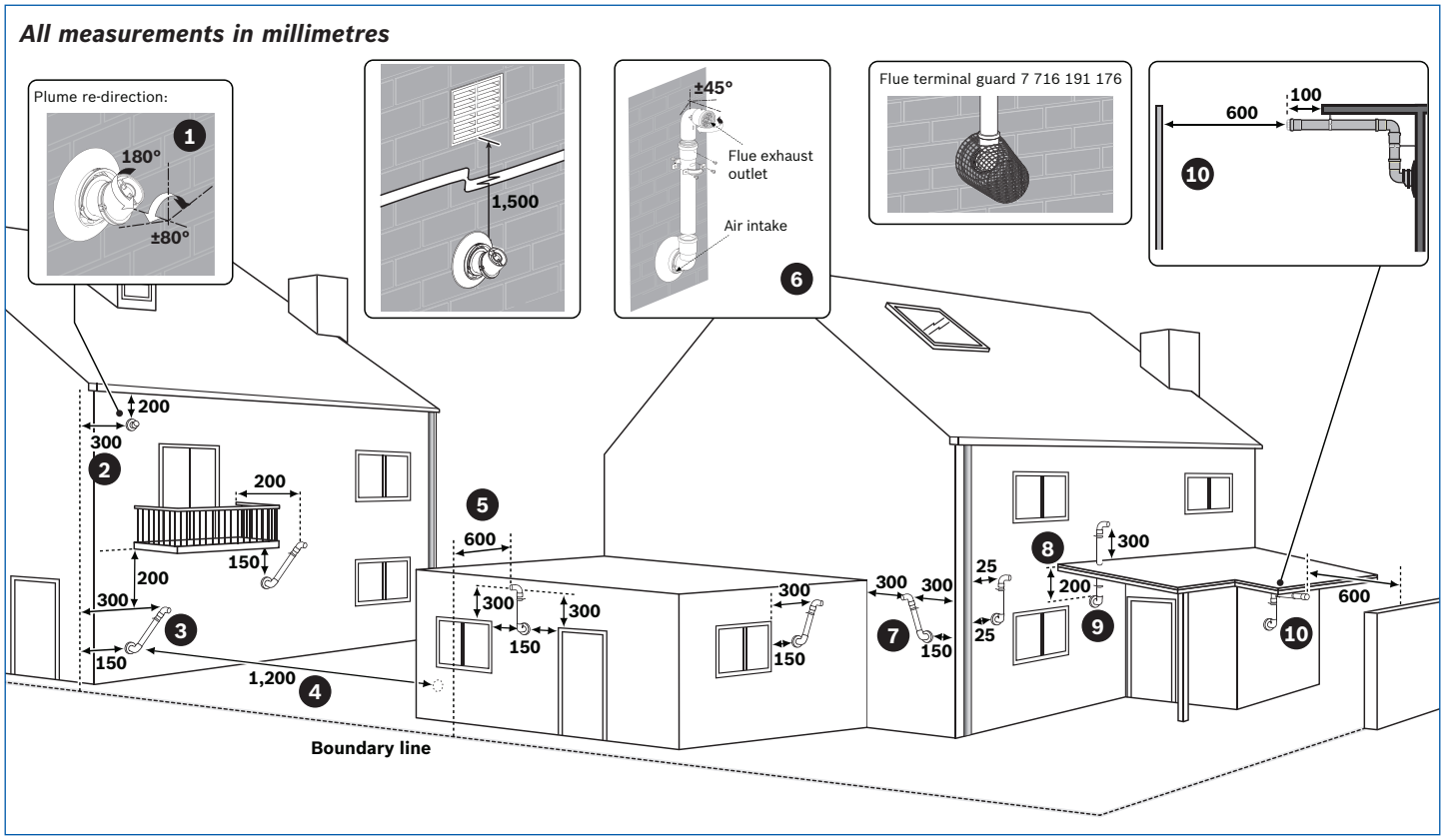

Note

- **All measurements are the minimum clearances required**
- **Refer to pages 46-47 for all concentric flue terminal positions unless the flue position is specified on the figure above "Plume terminal positions"**
- **Terminals must be positioned so as to avoid combustion products entering the building**
- **Support the flue at approximately one metre intervals and at a change of direction, use suitable brackets and fittings.**

Key to illustration

1. This feature allows some basic plume re-direction options on a standard telescopic horizontal flue terminal. 300mm minimum clearances to a opening, e.g. window. However the minimum clearances to an opening in the direction that the plume management is facing, must be increased to 1,500mm. Where the flue is less than 150mm to a drainpipe, and plume re-direction is used, the deflector should not be directed towards the drainpipe.
2. 300mm adjacent to a boundary line.
3. Plume Management Kit air intake can be reduced to 150mm providing the flue exhaust outlet is no less than 300mm adjacent to a boundary line.
4. 1,200mm between terminals facing each other.
5. 600mm distance to a boundary line, unless it will cause a nuisance. BS 5440:Part 1 recommends that care is taken when siting terminal in relation to boundary lines.
6. Using a Plume Management Kit, the air intake measurement can be reduced to 150mm providing the flue exhaust outlet has a 300mm clearance. Plume kits running horizontally must have a 10° fall back to the boiler for proper disposal of condensate. For details on specific lengths see relevant boiler Technical & Specification information.
7. Internal/external corners. The air intake clearance can be reduced to 150mm providing the flue exhaust outlet has a 300mm clearance.
8. Clearances no less than 200mm from the lowest point of the balcony or overhang.
9. 1,200mm from an opening in a car port on the same wall e.g. door or window leading into the dwelling.
10. 600mm distance to a surface facing a terminal, unless it will cause a nuisance. BS 5440: Part 1 recommends that care is taken when siting terminals in relation to surfaces facing a terminal.

- **Installations in car ports are not recommended**
- **The flue cannot be lower than 1,000mm from the top of a light well due to the build up of combustion products**
- **Dimensions from a flue terminal to a fanned air inlet to be determined.**

Plume management system options

Plume management system

60mm dia. plume management kit

1 x terminal bend

1 x extension 500mm

1 x outlet assembly

1 x clamp pack

Part No. 7 716 191 086

Accessories

Components	Part No.	Description
60mm diameter		
	7 716 191 086	Plume management kit
	7 716 191 087	Extension (1,000mm)
	7 716 191 088	90º bend
	7 716 191 089	45º bend (pair)
	7 716 191 176	Plume management terminal guard round

Standard plume management system

The flue terminal outlet has built-in stops which limits the rotation for horizontal fluing, allowing the condensate to run back into the boiler for safe disposal. Do not attempt to force beyond the limit stops.

Any plume management extensions as far as the first elbow must rise by at least 173mm per metre (10º). Further subsequent extensions must rise by 52mm (3º) to ensure that condensate flows back to the boiler.

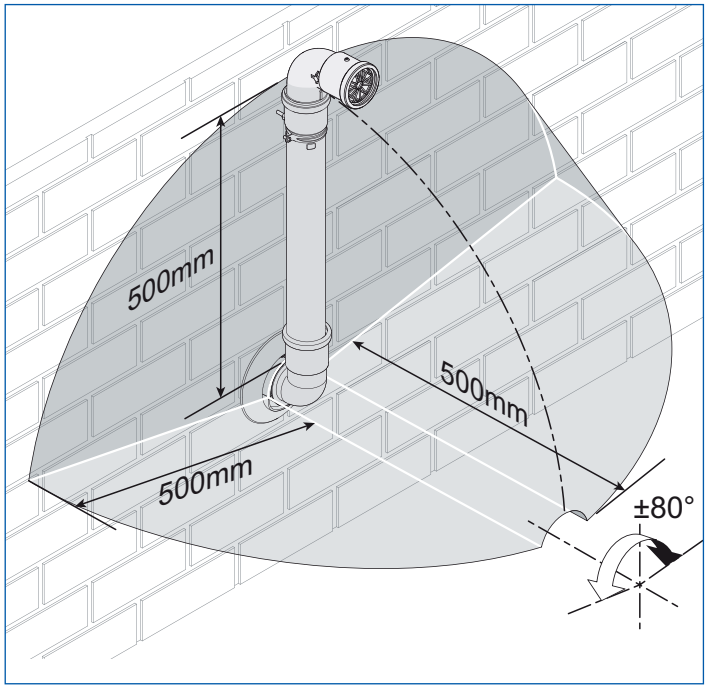

Terminal exclusion zone

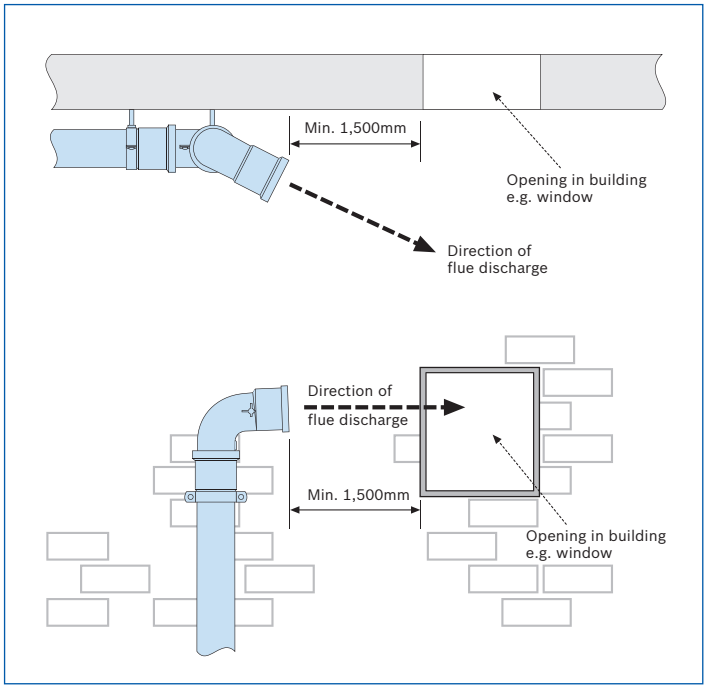

Re-directing flue discharge from a 60mm dia. plume management outlet

For Greenstar CDi Classic boilers, the 100mm dia. internal flue length is immediately reduced by 2,000mm when the minimum plume management of 500mm is used.

For the Greenstar CDi Compact and Si Compact boilers, the 100mm dia. internal flue is immediately reduced by 1,000mm when the minimum plume management of 500mm is used.

Greenstar i boilers are able to use the maximum 100mm dia. internal flue length of 4,500mm regardless of the amount of plume management selected.

External plume management bends still need to be allowed for. For more information, see below.

Furthermore, for both the Greenstar CDi Classic, CDi Compact and Si Compact, the internal flue length must be reduced by 700mm for every additional 1,000mm of plume management, refer to the table below.

60mm dia. plume management system

To ensure that the maximum total straight flue length along the plume management route is not exceeded, the following should be added to dimension (M):

- 1,500mm for each extra 90º bend
- 750mm for each extra 45º bend

For plume management options with 60mm dia. extensions, please refer to page 58.

The effective 100mm dia. internal flue length can be determined by adding together all the straight flue lengths and the effective lengths of the bends used. Allowances for 90º and 45º bends are detailed on pages 48-54.

Condensfit II™ telescopic flue and plume management system measuring

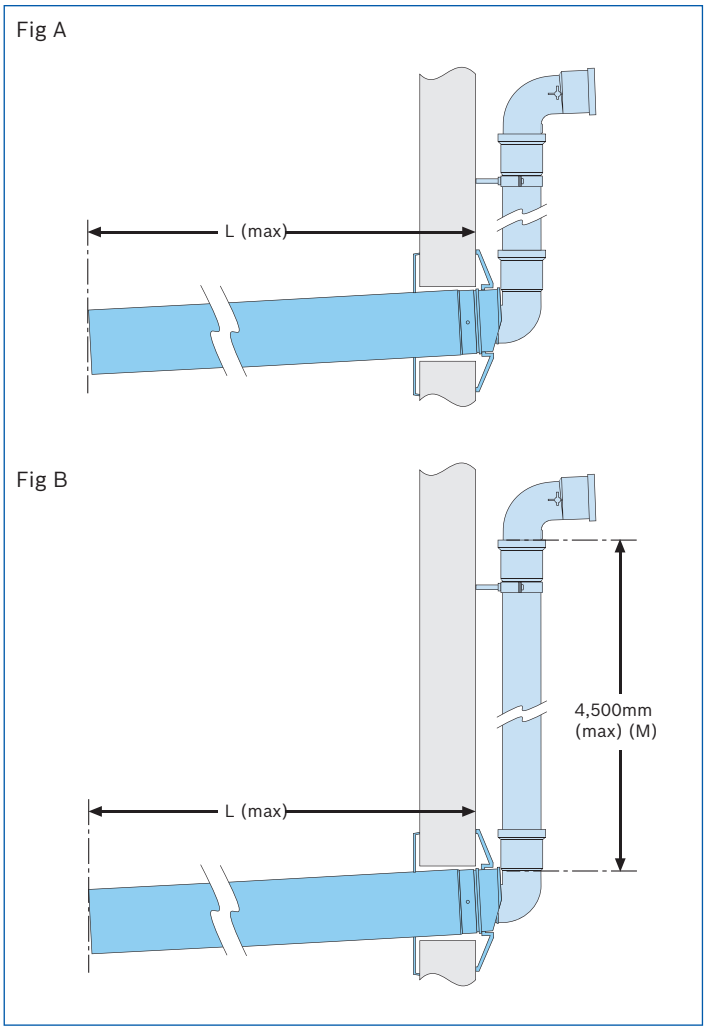

Effective straight flue lengths for telescopic flue with plume management		
Boiler	**Fig. A** **Maximum straight flue length (L) with minimum plume management length 500mm (M)**	**Fig. B** **Maximum straight flue length (L) with maximum plume management length 4,500mm (M)**
29CDi Classic	5,900mm	3,100mm
34CDi Classic	5,000mm	2,200mm
38CDi Classic	4,000mm	1,200mm
42CDi Classic	4,000mm	1,200mm
CDi Compact and Si Compact series	5,000mm	2,200mm
i series	4,500mm	4,500mm

Plume management system

See terminal exclusion zone diagram on page 56

Components		
Part No. 60mm		7 716 191 086
Maximum lengths (mm) & no. of components required		
Greenstar CDi Classic, CDi Compact*, Si Compact and i series		
60mm	500	1

Plume management system with extensions

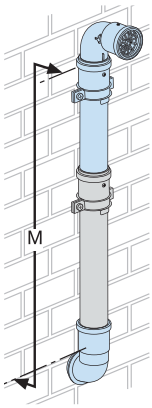

Components		
Part No. 60mm	7 716 191 086	7 716 191 087
Maximum lengths (mm) & no. of components required		
Greenstar CDi Classic, CDi Compact*, Si Compact and i series		
60mm	4,500	1	up to 4

Plume management system with extensions and 45º bend

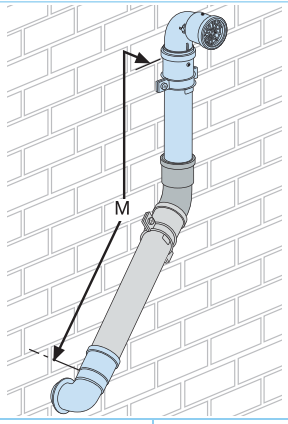

Components			
Part No. 60mm	7 716 191 086	7 716 191 087	7 716 191 089
Maximum lengths (mm) & no. of components required			
Greenstar CDi Classic, CDi Compact*, Si Compact and i series			
60mm	3,750	1	up to 4	1

Plume management system with angled termination

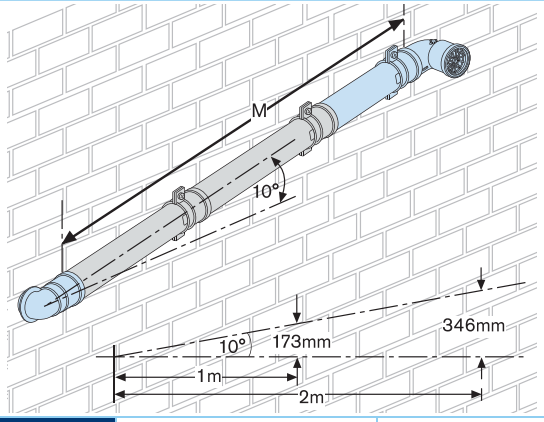

Components		
Part No. 60mm	7 716 191 086	7 716 191 087
Maximum lengths (mm) & no. of components required		
Greenstar CDi Classic, CDi Compact*, Si Compact and i series		
60mm	4,500	1	up to 4

Plume management system with extensions and 45º bends

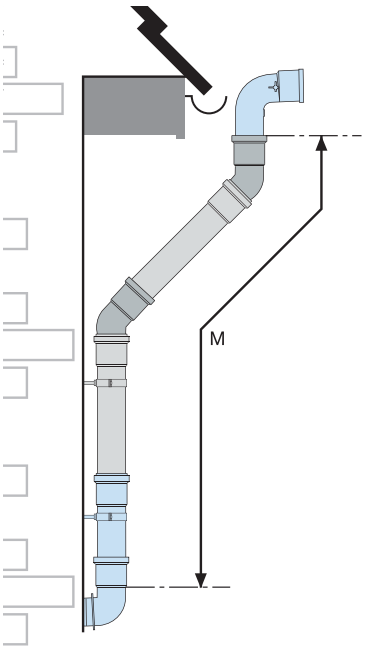

Components			
Part No. 60mm	7 716 191 086	7 716 191 087	7 716 191 089
Maximum lengths (mm) & no. of components required			
Greenstar CDi Classic, CDi Compact*, Si Compact and i series			
60mm	3,000	1	up to 3	2

***NOTE: For CDi Classic, CDi Compact and Si Compact you must refer to the table on page 57 to calculate your horizontal flue lengths and plume management lengths.**

Greenstar combi boiler range accessories

Greenstar combi boiler controls

MT10 mechanical timer

Worcester Part No.
7 716 192 036

MT10RF mechanical RF thermostat

Worcester Part No.
7 716 192 037

Comfort plug-in twin channel programmer

Worcester Part No.
7 733 600 003

Comfort I RF wireless room thermostat and plug-in twin channel programmer

Worcester Part No.
7 733 600 001

Comfort II RF wireless programmable room thermostat and plug-in RF receiver

Worcester Part No.
7 733 600 002

Comfort wall mounting plate kit

Worcester Part No.
7 733 600 039

Sense I intelligent room thermostat^

Worcester Part No.
7 738 110 054

Sense II weather compensation controller

Worcester Part No.
7 738 111 064

Wave

Worcester Part No.
7 716 192 072

Weather sensor*

Worcester Part No.
7 716 192 764

*^For use with MT10 or 230V programmer. *For use with Greenstar i only.*

Greenstar combi boiler range accessories

Condensfit II™ 60/100mm & 80/125mm horizontal & vertical flue accessories

Standard telescopic flue kit (100mm dia.)

Worcester Part No.
7 716 191 082

Standard telescopic horizontal flue kit (125mm dia.)

Worcester Part No.
7 719 003 702

Long telescopic flue kit (100mm dia.)

Worcester Part No.
7 716 191 171

Vertical BF kit (100mm dia.)

Worcester Part No.
7 719 002 430

Vertical BF kit (125mm dia.)

Worcester Part No.
7 719 002 431

1,000mm extension kit (100mm dia.)

Worcester Part No.
7 716 191 083

1,000mm extension (125mm dia.)

Worcester Part No.
7 719 003 666

2m flue extension (100mm dia.)

Worcester Part No.
7 716 191 172

Short flue extension 220mm (100mm dia.)

Worcester Part No.
7 716 191 133

45º bend (100mm dia.)

Worcester Part No.
7 716 191 085

45º bend (125mm dia.)

Worcester Part No.
7 719 003 665

90º bend (100mm dia.)

Worcester Part No.
7 716 191 084

90º bend (125mm dia.)

Worcester Part No.
7 719 003 664

High level horizontal flue adaptor (100mm dia.)

Worcester Part No.
7 719 002 432

High level horizontal flue adaptor (125mm dia.)

Worcester Part No.
7 719 002 433

Support bracket kit (100mm dia.)

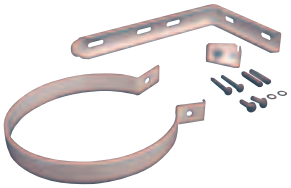

Worcester Part No.
7 716 191 177

Support bracket kit 6 pack (100mm dia.)

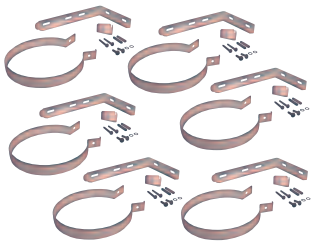

Worcester Part No.
7 716 191 178

Support bracket kit (125mm dia.)

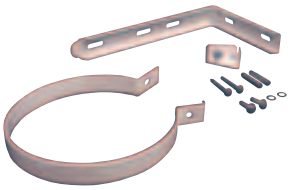

Worcester Part No.
7 716 191 179

Greenstar combi boiler range accessories

Additional accessories

Filling link†

Worcester Part No.
7 716 192 281

Worcester keyless filling link*

Worcester Part No.
7 716 192 610

Vertical pre-piping assembly for CDi Classic

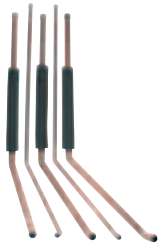

Worcester Part No.
7 716 192 607

Vertical pre-piping assembly for CDi Compact, Si Compact and i combi

Worcester Part No.
7 716 192 713

Earth bonding strip^

Worcester Part No.
7 716 192 686

Domestic hot water combi pre-heat accessory for CDi Compact

Worcester Part No.
7 716 192 735

Plume management kit (60mm dia.)

Worcester Part No.
7 716 191 086

Extension (60mm dia., 1,000mm)

Worcester Part No.
7 716 191 087

45º bend (60mm dia.)

Worcester Part No.
7 716 191 089

90º bend (60mm dia.)

Worcester Part No.
7 716 191 088

Worcester CondenseSure siphon#

Worcester Part No.
7 716 192 746

Flat roof flashing kit (100mm & 125mm dia.)

Worcester Part No.
7 716 191 090

†Greenstar Si Compact and Greenstar i accessory only – supplied as standard with Greenstar CDi Compact.
**Greenstar CDi Compact, Si Compact and Greenstar i accessory only – supplied as standard with Greenstar CDi Classic.*
^Supplied as standard with Greenstar CDi Classic. #Greenstar CDi Compact and Si Compact accessory only – built into Greenstar CDi Classic and Greenstar i.

Pitched roof flashing kit (100mm & 125mm dia.)

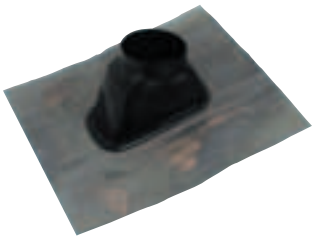

Worcester Part No.
7 716 191 091

Plume management terminal guard round (60mm dia.)

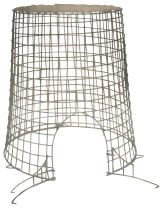

Worcester Part No.
7 716 191 176

Greenstar System Filter (22mm)

Worcester Part No.
7 733 600 236

Greenstar System Filter (28mm)

Worcester Part No.
7 733 600 237

WB3 cleaning tool

Worcester Part No.
7 733 600 091

WB5 cleaning tool

Worcester Part No.
7 719 001 996

WB7 cleaning tool

Worcester Part No.
7 746 901 479

Remote PRV kit**

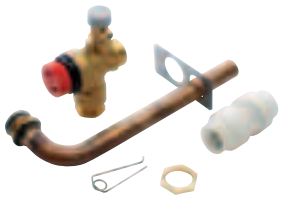

Worcester Part No.
7 716 161 071

Flue Gas Heat Recovery Unit

Worcester Part No.
7 733 600 047

***For CDi Classic and Greenstar i only.*

Total training experience from Land's End to John O'Groats

Worcester has always been committed to setting the industry standard for expert professional training and this is reflected in the scope and content of the courses, venues and options available.

We offer training on our entire range of domestic and commercial heating technologies as well as industry-led courses. All tuition is handled by expert heating specialists, combining classroom theory with, practical hands-on experience. Keep up-to-date with legislation and experience hands-on-training with our new technologies.

To increase your skills, expertise and value in the market place, trust Worcester's unique and proven total training concept.

Training centres throughout the UK

Worcester

Worcester's award-winning, state-of-the-art Training Academy is an innovative and spacious high tech training arena at our headquarters in Worcester. Facilities include open-plan domestic training areas with life-size single-storey brick buildings. Here installers can get to grips with Greenskies solar thermal systems working with Greenstar gas appliances, clearly demonstrating the importance of system design and operation.

Wakefield

Opened in Summer 2013, the Wakefield Training and Assessment Academy boasts a large gas laboratory which features our entire range of Greenstar gas-fired appliances, a flushing area, wet and dry boilers and a light commercial area with a cascade of Worcester GB162 boilers. There is a solar room with fully working components from our entire Greenskies solar range and a pitched roof for practical training, as well as a large commercial training room.

West Thurrock and Clay Cross

Further academies are located at West Thurrock in Essex and Clay Cross in Derbyshire, both of which offer a comprehensive choice of courses.

College-linked Learning

As well as offering training at our own centres, Worcester has established close partnerships with many colleges around the UK, equipping them with our latest products.

Worcester has worked closely with leading colleges and independent training centres for more than 20 years – a successful enterprise which in 2007 was enhanced further with the launch of the College Links Learning Scheme.

Mobile training

We can also bring training to you. We have mobile vehicles fully equipped with operational Greenstar gas-fired boilers, dry strip-down models and even a Greensource air to air heat pump. Our 7.5 tonne mobile oil vehicle is also available for hands-on oil product training and OFTEC assessments.

Call now for more information 0330 123 0166.

Gas-fired product courses

As a market leader in gas-fired condensing boilers, we aim to ensure the highest levels of competence and expertise in the installation of all Worcester Greenstar gas-fired products. We run intensive training courses for installers, commissioning engineers and operatives involved with servicing and fault finding.

Our comprehensive gas-fired condensing boiler training courses include product overview, inspection and cleaning of components, CO and CO_2 analysis of flue gas, removal of compact hydraulics, service mode functions and fault finding on 'live and demo' appliances.

Gas-fired condensing boiler courses

- **Greenstar CDi Classic gas-fired condensing combi boilers.**
- **Greenstar CDi Compact and Greenstar Si Compact gas-fired condensing combi boilers.**
- **Greenstar i gas-fired condensing combi boilers.**
- **Greenstar system & regular gas-fired condensing boilers.**
- **Greenstar Highflow CDi & FS CDi Regular floor standing gas-fired condensing combi and regular boilers.**
- **Greenstar Controls** (covers MT10, MT10RF, Greenstar Comfort range, Wave internet connected room thermostat, NEW Greenstar Sense range and solar controls).

	Greenstar Overview	CDi Classic	CDi Compact & Si Compact	Greenstar i	System & Regular	Highflow CDi & FS CDi Regular	Controls
Duration	1 Day	1 Day	1 Day	1 Day	1 Day	1 Day	1 Day
Cost	Free*	Free*	Free*	Free*	Free*	Free*	Free*
Training course covers							
Specification	✔	✔	✔	✔	✔	✔	Guide to the varied range of control options that are available
Installation	✔	✔	✔	✔	✔	✔	
Commissioning	✔	✔	✔	✔	✔	✔	
Servicing	✔	✔	✔	✔	✔	✔	
Maintenance	✔	✔	✔	✔	✔	✔	
Course locations							
Worcester	✔	✔	✔	✔	✔	✔	✔
Clay Cross	✕	✕	✕	✕	✕	✕	✔
Wakefield	✔	✔	✔	✔	✔	✔	✔
West Thurrock	✔	✔	✔	✔	✔	✕	✕
College Links†	✔	✔	✔	✔	✔	✕	✔
Mobile†	✔	✔	✔	✔	✕	✕	✔

*A holding fee of £65 applies to free courses and is refunded on attendance of the course. If a booking is cancelled more than 10 working days before the course date, the fee will be fully refunded. The fee is non-refundable if a cancellation is made less than 10 working days before the course date.
†Please contact Worcester Training for specific colleges and mobile dates.

Additional product and industry training courses

The diversity of products in today's heating industry gives you the opportunity to expand your expertise, whilst offering more choice to your customers. Worcester provides comprehensive training from all its academies on its entire range of technologies. Call us on **0330 123 0166** to order a full course training brochure or to book yourself onto a training course, alternatively, you can visit **www.worcester-bosch.co.uk/training**

Oil-fired product courses

- **Greenstar Danesmoor & Heatslave II high efficiency condensing oil-fired boilers.**
- **Oil advanced fault finding.**
- **OFTEC 50.**
- **OFTEC 101/105e, OFTEC 600a and OFTEC 101/105e/600a.**

Renewable product courses

- **Renewables overview.**
- **Greenskies solar.**
- **Greenskies advanced solar.**
- **Introduction to heat pumps.**
- **Greenstore ground source heat pumps.**
- **Greensource air to air heat pumps.**

Worcester commercial product courses

- **Greenspring CWi47 water heater.**
- **GB162 overview.**
- **GB162 domestic.**
- **GB162 commercial.**
- **Greenstar Heat Distribution Unit.**
- **Commercial ACS training and assessment – CODNCO1.**

Bosch commercial product courses

- **GB312 & GB402 overview.**
- **Solar thermal product overview.**
- **GWPL Gas Absorption Heat Pumps overview.**
- **CHP overview.**
- **Commercial controls overview.**

Industry focused courses

- **Hot water systems & safety.**
- **Chemical water treatment.**
- **Construction skills F-Gas training/assessment certification.**
- **IDHEE domestic heating design.**
- **Domestic ACS training and assessment – reassessment. CCN1 + 3 appliances.**
- **QCF Level 3 Award**
  - **Air source and ground source heat pumps.**
  - **Air to water and split air to water heat pumps.**
  - **Solar thermal.**
- **MCS Made Easy.**
- **LPG Changeover.**
- **WRAS Water Regulations.**

A complete after-sales service

As part of the worldwide Bosch Group, Worcester strives to maintain the highest possible standards of after-sales care.

Worcester Contact Centre

Should you require support, our award winning Contact Centre team, based at our head office in Worcester, are ready to take your calls. Whatever your query our contact centre operators along with our nationwide team of engineers are ready to help you.

Tel: 0330 123 9559

Opening times

Monday – Friday: 7.00am – 8.00pm
Saturday: 8.00am – 5.00pm
Sunday: 9.00am – 12 noon
Bank Holidays: 8.00am – 4.30pm

2014
OFTEC
Awards for
Excellence

Spares

Genuine replacement parts for all supported Worcester products are readily available from stock, or on a next day delivery basis. Visit **www.worcester-bosch.co.uk/spares** to find your local stockist.

Customer Technical Support

The Worcester Technical Helpline is a dedicated phone line – committed to providing a comprehensive service to complement the brand name and quality of our products. Our experienced team of technical experts provides answers to queries of a technical nature across the entire Worcester range.

Technical Support

Tel: 0330 123 3366
Fax: 01905 752 741
Email: technical-advice@uk.bosch.com

Opening times

Monday – Friday: 7.00am – 8.00pm
Saturday: 8.30am – 4.00pm
Bank Holidays: 8.00am – 4.30pm

ErP Technical Helpline

Tel: 0330 123 3641
Email: ErP-advice@uk.bosch.com

Useful numbers

Sales
Tel: 0330 123 9669
sales.mailbox@uk.bosch.com

Spare Parts
Tel: 0330 123 9779
spares.mailbox@uk.bosch.com

Technical Helpline (Pre & Post Sales)
Tel: 0330 123 3366
technical-advice@uk.bosch.com

ErP Technical Helpline
Tel: 0330 123 3641
ErP-advice@uk.bosch.com

Training
Tel: 0330 123 0166
training@uk.bosch.com

Literature
Email: brochure-request@uk.bosch.com
or download instantly from our website
or telephone 0330 123 9119

Customer Service

Service Enquiries
Email: service-enquiries@uk.bosch.com
or telephone 0330 123 9559

Guarantee Registration
To register your Worcester guarantee, please visit our website worcester-bosch.co.uk/guarantee, download our guarantee registration app or telephone 0330 123 2552

Guarantee app

Share

We would love to see your installations.

Follow us on: **@WorcesterBosch**
Tag your installations with: **#WarmAtHeart**

We are also on:

Calls to and from Bosch Thermotechnology Ltd may be recorded for training and quality assurance purposes.

worcester-bosch.co.uk

In partnership with energy saving trust™

Worcester, Bosch Group is a brand name of Bosch Thermotechnology Ltd.
This leaflet is accurate at the date of printing, but may be superseded and should be disregarded if specification and/or appearances are changed in the interest of continued improvement. The statutory rights of the consumer are not affected. Apple is a trademark of Apple Inc., registered in the U.S. and other countries. App Store is a service mark of Apple Inc. Google Play and Android are trademarks of Google Inc.

BBT4048

WORCESTER
Bosch Group
Worcester, Bosch Group,
Cotswold Way, Warndon,
Worcester, WR4 9SW

Part No. 8 716 116 716 G 01/16